1. ALL RESISTANCE VALUES ARE IN OHMS, 0.1 WATT +/- 5%.
2. ALL CAPACITANCE VALUES ARE IN MICROFARADS.
3. ALL CRYSTALS & OSCILLATOR VALUES ARE IN HERTZ.

苹果老师维修论坛
http://www.cpu998.com
QQ:499944468

REV	ECN	DESCRIPTION OF REVISION	CK APPD / DATE
A	0000880153	PRODUCTION RELEASED	2010-03-23

N90 SINGLE_BRD PVT

Fri Apr 16 15:07:25 2010

PDF PAGE	CSA PAGE	CONTENTS	SYNC MASTER	DATE
1	1	TABLE OF CONTENTS		
2	2	H3 JTAG, USB ,MISC		
3	3	H3 GPIO,UART,SPI,I2S,I2C,SDIO		
4	4	AP PWR		
5	5	AP PWR(CONT.)		
6	6	ANALOG VIDEO,H3 NAND, NAND		
7	7	H3 MIPI,DPORT,SMIA		
8	8	L61 CODEC		
9	9	HPHONE FILTERS, MIKEY		
10	10	BUTTON B2B, COMPASS		
11	11	ASHLEY PMU		
12	12	SIM,ACCEL,OVP,GYRO COMPASS		
13	13	HPARK, SWITCH ESD, SIM CARD		
14	14	DOCK,SPKR AMP		
15	15	NIMBUS, GRAPE, LCD CONN.		
16	16	CAMERA,STROBE,SENSOR B2B		
17	17	RADIO,USB MUX,EM PARTS		
18	18	TEST POINTS		

MCO 056-3008
BRD 820-2548
SCH 051-7921
BOM 639-0648(16GB,USI)
BOM 630-9941(16GB,MURATA)
BOM 639-0437(32GB,USI)
BOM 639-0609(32GB,MURATA)
BOM 639-0608(64GB,USI)
BOM 639-0607(64GB,MURATA)

H3P ALTERNATES

PART NUMBER	ALTERNATE FOR PART NUMBER	BOM OPTION	REF DES	COMMENTS:
339S0123	339S0108	?	U52	H3P + ELPIDA 512MB
339S0126	339S0108	?	U52	H3P + HYNIX 512MB

L9 (STROBE) ALTERNATE

PART NUMBER	ALTERNATE FOR PART NUMBER	BOM OPTION	REF DES	COMMENTS:
152S1173	152S0979	?	L9	

VIDEO BUFFER ALTERNATE

PART NUMBER	ALTERNATE FOR PART NUMBER	BOM OPTION	REF DES	COMMENTS:
353S2684	353S2493	?	U9	INTERSIL BUFFER

G3_RF ALTERNATES

PART NUMBER	ALTERNATE FOR PART NUMBER	BOM OPTION	REF DES	COMMENTS:
197S0371	197S0349	?	G3_RF	
197S0364	197S0349	?	G3_RF	

FL1_RF ALTERNATES

PART NUMBER	ALTERNATE FOR PART NUMBER	BOM OPTION	REF DES	COMMENTS:
155S0452	155S0435	?	FL1_RF	

G2_RF ALTERNATES

PART NUMBER	ALTERNATE FOR PART NUMBER	BOM OPTION	REF DES	COMMENTS:
197S0334	197S0292	?	G2_RF	

Y1_RF ALTERNATES

PART NUMBER	ALTERNATE FOR PART NUMBER	BOM OPTION	REF DES	COMMENTS:
197S0329	197S0299	?	Y1_RF	
197S0369	197S0299	?	Y1_RF	

Y2_RF ALTERNATE

PART NUMBER	ALTERNATE FOR PART NUMBER	BOM OPTION	REF DES	COMMENTS:
197S0342	197S0297	?	Y2_PMU	

L2_PMU ALTERNATE

PART NUMBER	ALTERNATE FOR PART NUMBER	BOM OPTION	REF DES	COMMENTS:
152S1172	152S0928	?	L2_PMU	

L7_PMU ALTERNATE

PART NUMBER	ALTERNATE FOR PART NUMBER	BOM OPTION	REF DES	COMMENTS:
152S1051	152S0927	?	L7_PMU	

LCD BL DRIVER ALTERNATE

PART NUMBER	ALTERNATE FOR PART NUMBER	BOM OPTION	REF DES	COMMENTS:
376S0769	376S0768	?	Q1_PMU	LCD BL FET DRIVER

Y1_PMU ALTERNATE

PART NUMBER	ALTERNATE FOR PART NUMBER	BOM OPTION	REF DES	COMMENTS:
197S0329	197S0299	?	Y1_PMU	
197S0369	197S0299	?	Y1_PMU	

PMU POWER IND ALTERNATE

PART NUMBER	ALTERNATE FOR PART NUMBER	BOM OPTION	REF DES	COMMENTS:
607-6810	607-6809	?	L1_L3_L16_L18_PMU	CYNTEC INDUCTORS
197S0369	197S0299	?	Y1_PMU	

SCH & PCB BOM CALLOUT

PART#	QTY	DESCRIPTION	REFERENCE DESIGNATOR(S)	CRITICAL	BOM OPTION
051-7921	1	N90_SCHEMATIC_TOP	SCH	Y	?
820-2548	1	N90_SINGLE_BOARD	PCB	Y	?

H3P BOM CALLOUT

PART#	QTY	DESCRIPTION	REFERENCE DESIGNATOR(S)	CRITICAL	BOM OPTION
339S0108	1	H3P WITH 512MB SAMSUNG DDR	U52	Y	?

BB MEMORY BOM CALLOUT

PART#	QTY	DESCRIPTION	REFERENCE DESIGNATOR(S)	CRITICAL	BOM OPTION
341S2509	1	BB_MEM_PROGRAMMED	U4_RF	Y	BB_MEM

N90 EEE BOM LABELS

PART#	QTY	DESCRIPTION	REFERENCE DESIGNATOR(S)	CRITICAL	BOM OPTION
825-2029	1	EEE FOR 630-9941 (16G)	EEE_6LU	Y	GOOD_MURATA
825-2029	1	EEE FOR 639-0609 (32G)	EEE_D7F	Y	BETTER_MURATA
825-2029	1	EEE FOR 639-0607 (64G)	EEE_D7D	Y	BEST_MURATA
825-2029	1	EEE FOR 639-0648 (16G)	EEE_DPM	Y	GOOD_USI
825-2029	1	EEE FOR 639-0437 (32G)	EEE_BA0	Y	BETTER_USI
825-2029	1	EEE FOR 639-0608 (64G)	EEE_D7E	Y	BEST_USI

NAND BOM OPTIONS

PART#	QTY	DESCRIPTION	REFERENCE DESIGNATOR(S)	CRITICAL	BOM OPTION
335S0682	1	16GB SAMSUNG 35NM FLASH WLGA52	U1	Y	GOOD_MURATA
335S0665	1	32GB SAMSUNG 35NM FLASH TLGA52	U1	Y	BETTER_MURATA
335S0707	1	64GB SAMSUNG 35NM FLASH LGA52	U1	Y	BEST_MURATA
117S0161	2	64GB NAND CE7 CE8 JUMPERS	R101, R102	Y	BEST_MURATA
335S0682	1	16GB SAMSUNG 35NM FLASH WLGA52	U1	Y	GOOD_USI
335S0665	1	32GB SAMSUNG 35NM FLASH TLGA52	U1	Y	BETTER_USI
335S0707	1	64GB SAMSUNG 35NM FLASH LGA52	U1	Y	BEST_USI
117S0161	2	64GB NAND CE7 CE8 JUMPERS	R101, R102	Y	BEST_USI

WIFI/BT BOM OPTIONS

PART#	QTY	DESCRIPTION	REFERENCE DESIGNATOR(S)	CRITICAL	BOM OPTION
339S0092	1	MURATA WIFI_BT MODULE	U2_RF	Y	GOOD_MURATA
117S0161	1	MURATA ID RESISTOR	R47_RF	Y	GOOD_MURATA
339S0092	1	MURATA WIFI_BT MODULE	U2_RF	Y	BETTER_MURATA
117S0161	1	MURATA ID RESISTOR	R47_RF	Y	BETTER_MURATA
339S0092	1	MURATA WIFI_BT MODULE	U2_RF	Y	BEST_MURATA
117S0161	1	MURATA ID RESISTOR	R47_RF	Y	BEST_MURATA
339S0091	1	USI WIFI_BT MODULE	U2_RF	Y	GOOD_USI
117S0161	1	USI ID RESISTOR	R46_RF	Y	GOOD_USI
339S0091	1	USI WIFI_BT MODULE	U2_RF	Y	BETTER_USI
117S0161	1	USI ID RESISTOR	R46_RF	Y	BETTER_USI
339S0091	1	USI WIFI_BT MODULE	U2_RF	Y	BEST_USI
117S0161	1	USI ID RESISTOR	R46_RF	Y	BEST_USI

PMU POWER IND CALLOUT

PART#	QTY	DESCRIPTION	REFERENCE DESIGNATOR(S)	CRITICAL	BOM OPTION
607-6809	1	POWER INDUCTORS	L1_L3_L16_L18_PMU	Y	?

SYNC_MASTER=N/A SYNC_DATE=N/A

DRAWING TITLE: TABLE OF CONTENTS

Apple Inc.

DRAWING NUMBER: 051-7921 SIZE: D

REVISION: A.0.0

BRANCH:

PAGE: 1 OF 18

SHEET: 1 OF 29

NOTICE OF PROPRIETARY PROPERTY:
THE INFORMATION CONTAINED HEREIN IS THE PROPRIETARY PROPERTY OF APPLE COMPUTER, INC.
THE POSESSOR AGREES TO THE FOLLOWING:
I TO MAINTAIN THIS DOCUMENT IN CONFIDENCE
II NOT TO REPRODUCE OR COPY IT
III NOT TO REVEAL OR PUBLISH IT IN WHOLE OR PART
IV ALL RIGHTS RESERVED

苹果老师维修论坛
http://www.cpu998.com
QQ:499944468

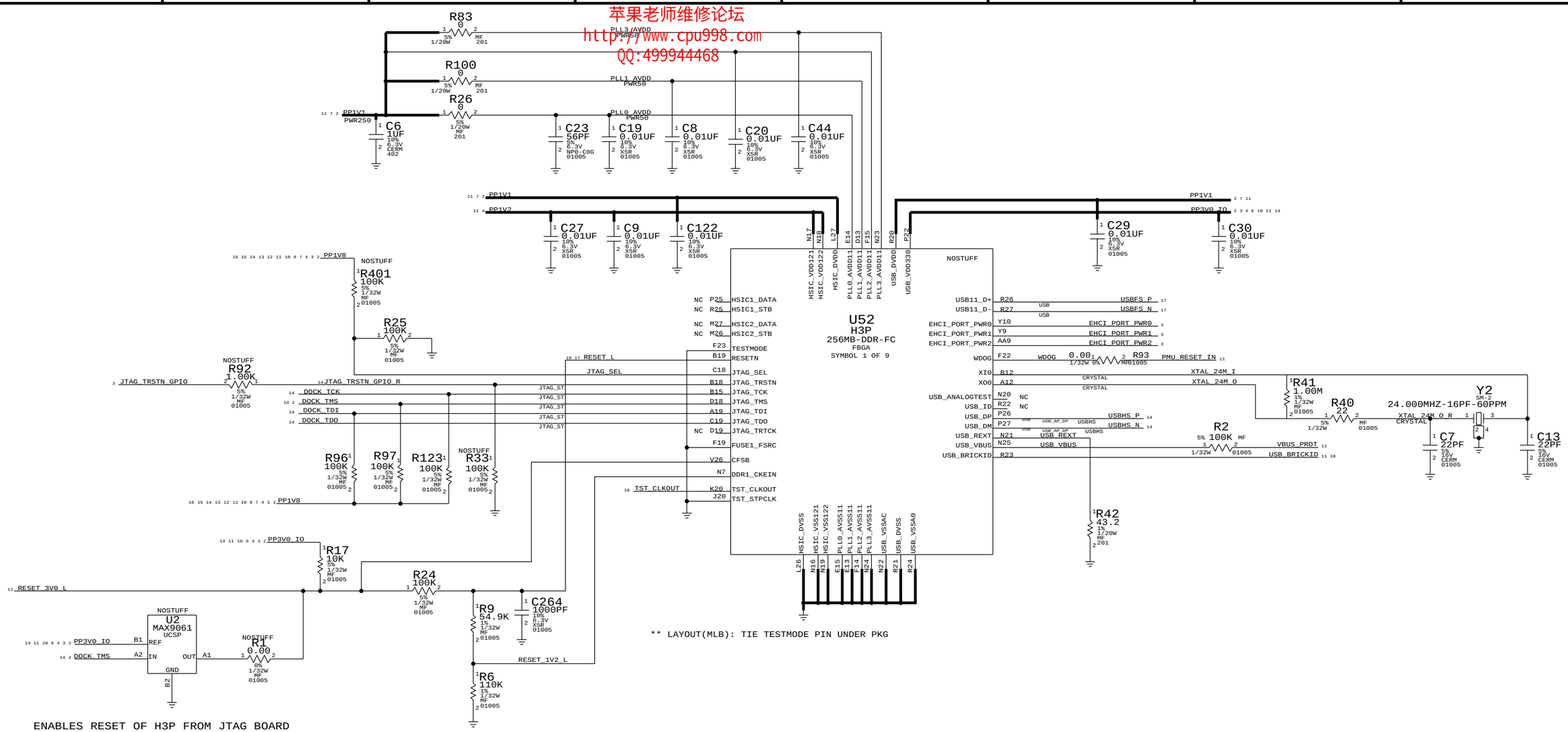

SYNC_MASTER=N/A SYNC_DATE=N/A

PAGE TITLE: H3 JTAG, USB ,MISC

Apple Inc.

DRAWING NUMBER: 051-7921 SIZE: D

REVISION: A.0.0

BRANCH

PAGE: 2 OF 18

SHEET: 2 OF 29

NOTICE OF PROPRIETARY PROPERTY:
THE INFORMATION CONTAINED HEREIN IS THE PROPRIETARY PROPERTY OF APPLE COMPUTER, INC.
THE POSESSOR AGREES TO THE FOLLOWING:
I TO MAINTAIN THIS DOCUMENT IN CONFIDENCE
II NOT TO REPRODUCE OR COPY IT
III NOT TO REVEAL OR PUBLISH IT IN WHOLE OR PART
IV ALL RIGHTS RESERVED

苹果老师维修论坛
http://www.cpu998.com
QQ:499944468

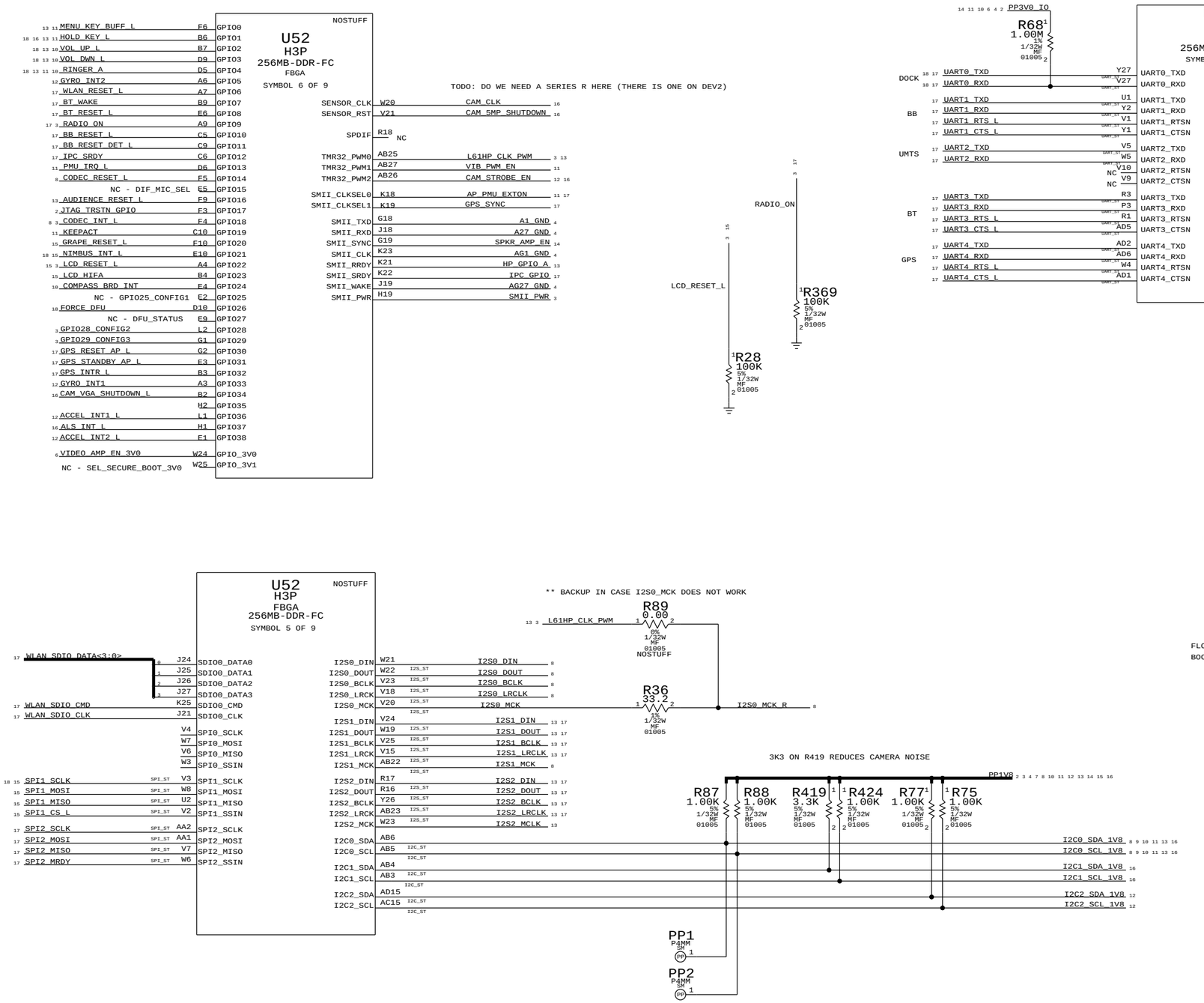

SYNC_MASTER=N/A SYNC_DATE=N/A

PAGE TITLE
H3 GPIO,UART,SPI,I2S,I2C,SDIO

Apple Inc.

DRAWING NUMBER 051-7921 SIZE D

REVISION A.0.0

BRANCH

PAGE 3 OF 18

SHEET 3 OF 29

NOTICE OF PROPRIETARY PROPERTY:
THE INFORMATION CONTAINED HEREIN IS THE PROPRIETARY PROPERTY OF APPLE COMPUTER, INC.
THE POSESSOR AGREES TO THE FOLLOWING:
I TO MAINTAIN THIS DOCUMENT IN CONFIDENCE
II NOT TO REPRODUCE OR COPY IT
III NOT TO REVEAL OR PUBLISH IT IN WHOLE OR PART
IV ALL RIGHTS RESERVED

苹果老师维修论坛
http://www.cpu998.com
QQ:499944468

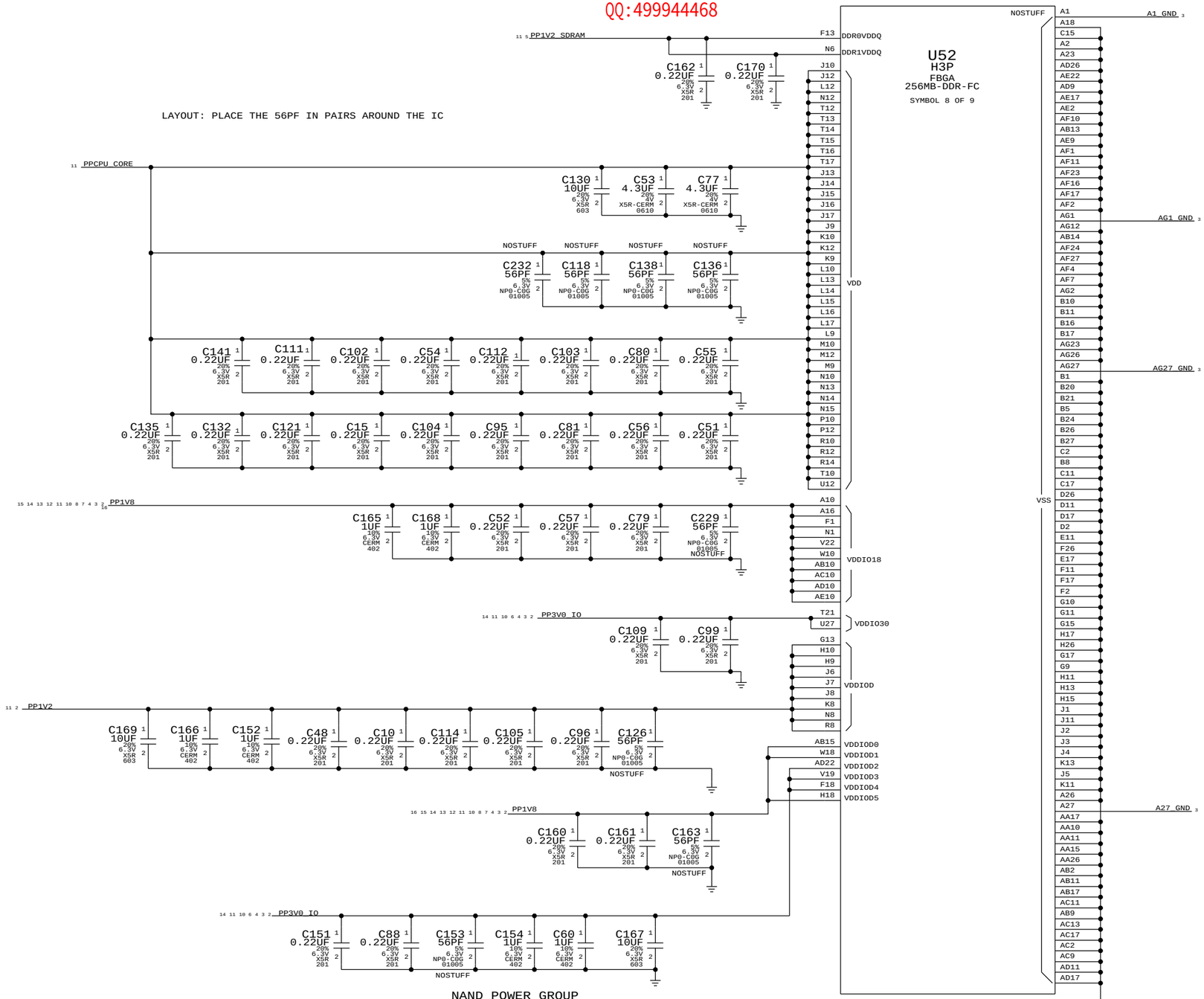

SYNC_MASTER=N/A SYNC_DATE=N/A

PAGE TITLE: AP PWR

Apple Inc.

DRAWING NUMBER: 051-7921 SIZE: D

REVISION: A.0.0

BRANCH

PAGE: 4 OF 18

SHEET: 4 OF 29

NOTICE OF PROPRIETARY PROPERTY:
THE INFORMATION CONTAINED HEREIN IS THE PROPRIETARY PROPERTY OF APPLE COMPUTER, INC.
THE POSESSOR AGREES TO THE FOLLOWING:
I TO MAINTAIN THIS DOCUMENT IN CONFIDENCE
II NOT TO REPRODUCE OR COPY IT
III NOT TO REVEAL OR PUBLISH IT IN WHOLE OR PART
IV ALL RIGHTS RESERVED

苹果老师维修论坛
http://www.cpu998.com
QQ:499944468

PLACE THE 56PF IN PAIRS AROUND THE IC

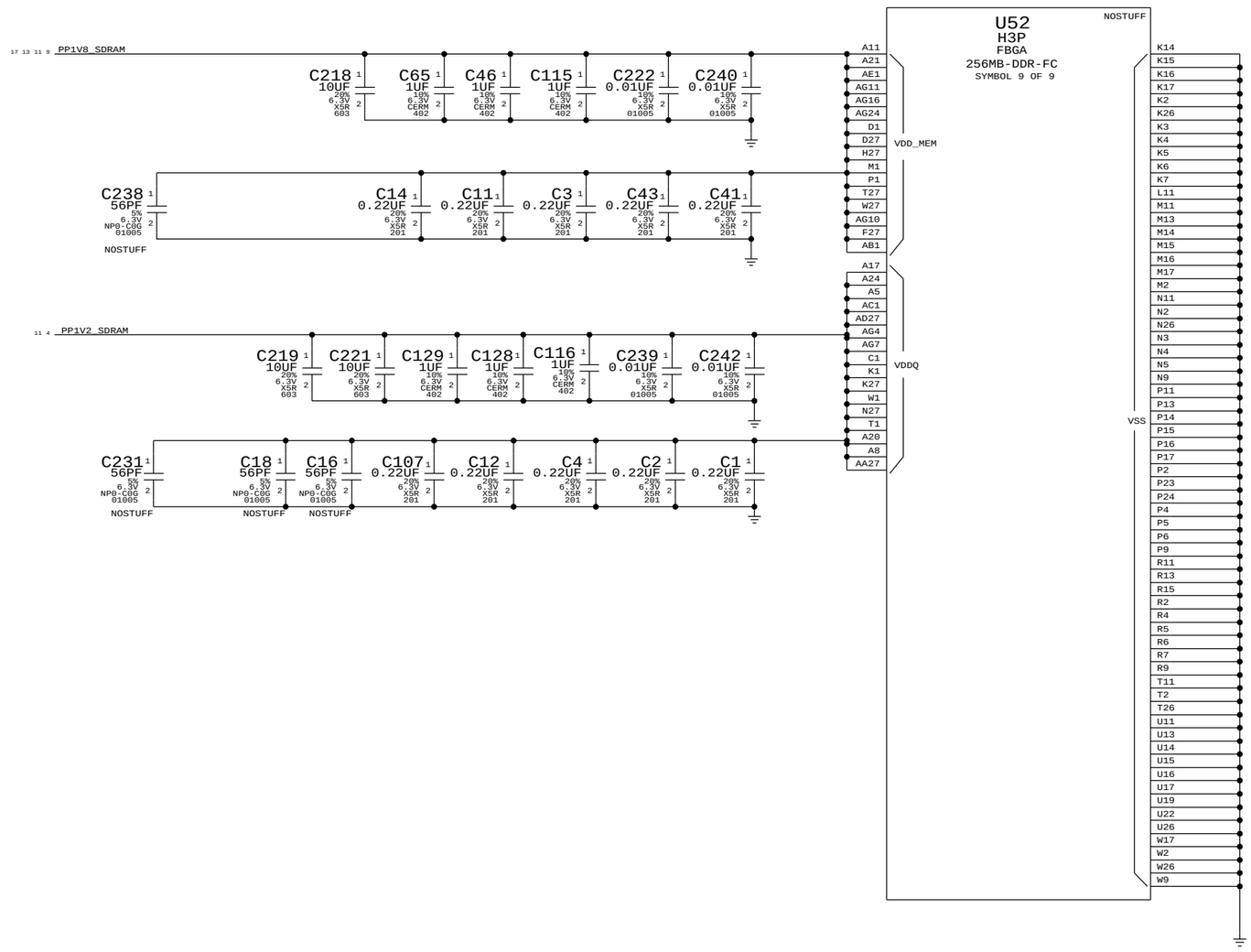

SYNC_MASTER=N/A SYNC_DATE=N/A

PAGE TITLE: AP PWR(CONT.)

Apple Inc.

DRAWING NUMBER: 051-7921 SIZE: D

REVISION: A.0.0

BRANCH

PAGE: 5 OF 18

SHEET: 5 OF 29

NOTICE OF PROPRIETARY PROPERTY:
THE INFORMATION CONTAINED HEREIN IS THE PROPRIETARY PROPERTY OF APPLE COMPUTER, INC.
THE POSESSOR AGREES TO THE FOLLOWING:
I TO MAINTAIN THIS DOCUMENT IN CONFIDENCE
II NOT TO REPRODUCE OR COPY IT
III NOT TO REVEAL OR PUBLISH IT IN WHOLE OR PART
IV ALL RIGHTS RESERVED

苹果老师维修论坛
http://www.cpu998.com
QQ:499944468

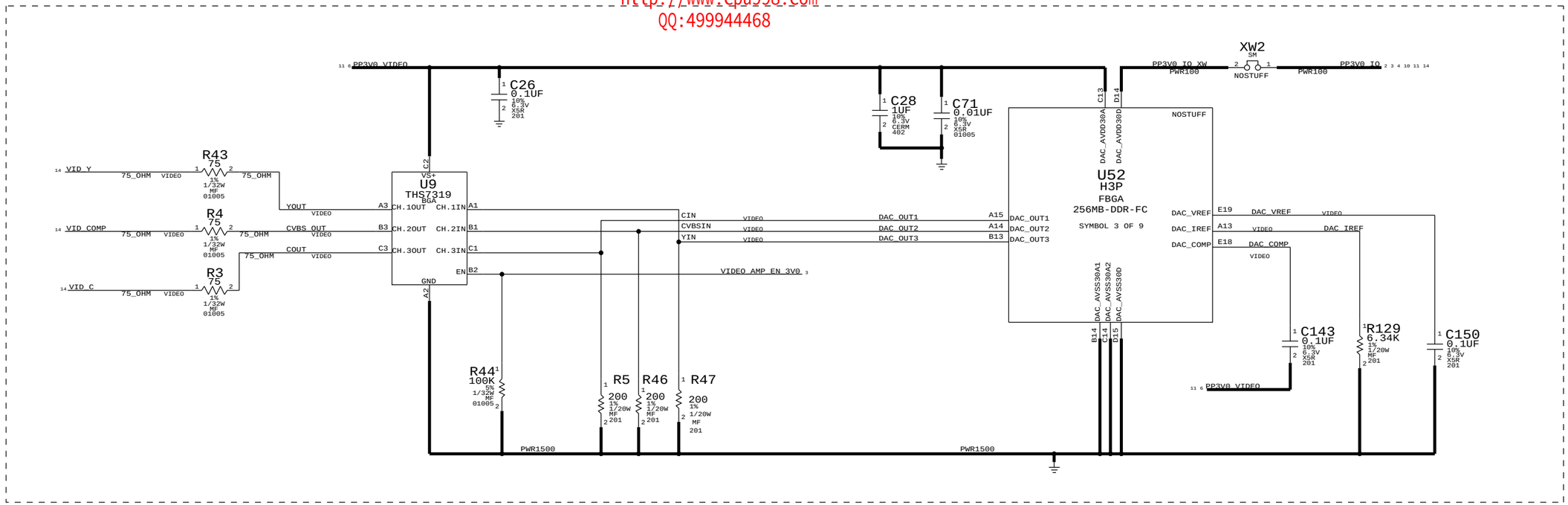

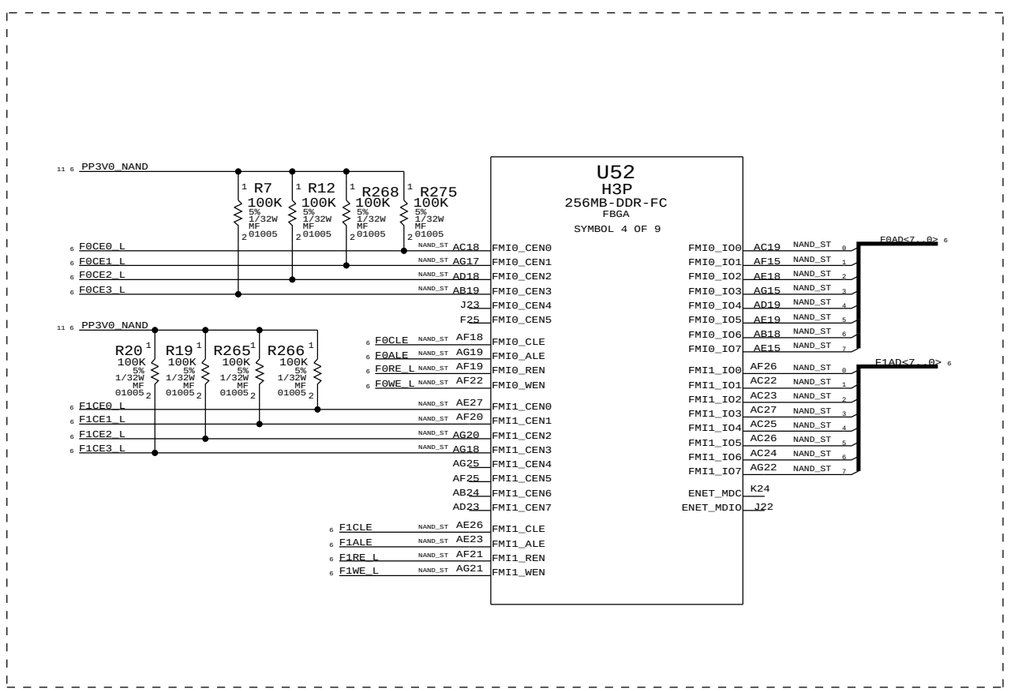

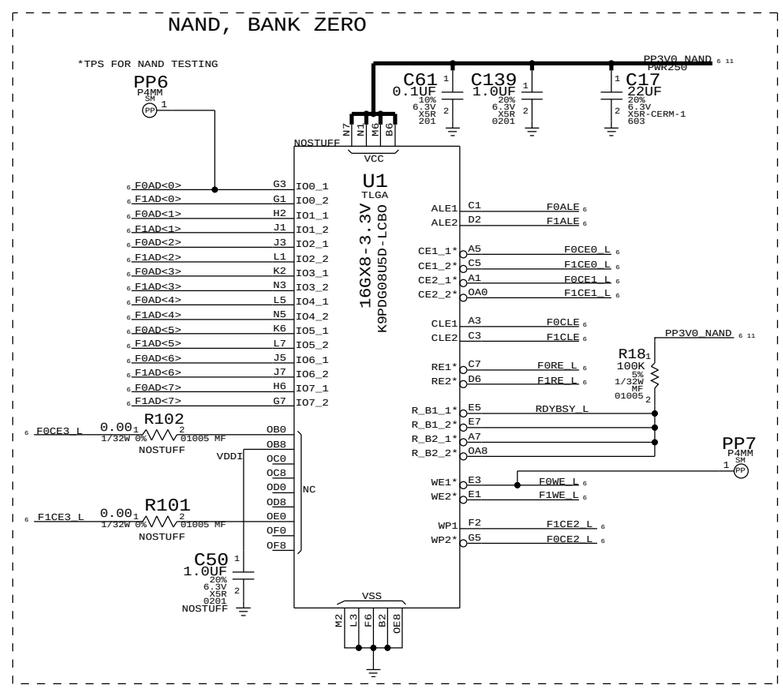

SYNC_MASTER=N/A	SYNC_DATE=N/A
PAGE TITLE: ANALOG VIDEO,H3 NAND, NAND	
Apple Inc.	DRAWING NUMBER: 051-7921 SIZE: D
	REVISION: A.0.0
NOTICE OF PROPRIETARY PROPERTY: THE INFORMATION CONTAINED HEREIN IS THE PROPRIETARY PROPERTY OF APPLE COMPUTER, INC. THE POSESSOR AGREES TO THE FOLLOWING: I TO MAINTAIN THIS DOCUMENT IN CONFIDENCE II NOT TO REPRODUCE OR COPY IT III NOT TO REVEAL OR PUBLISH IT IN WHOLE OR PART IV ALL RIGHTS RESERVED	BRANCH
	PAGE: 6 OF 18
	SHEET: 6 OF 29

苹果老师维修论坛
http://www.cpu998.com
QQ:499944468

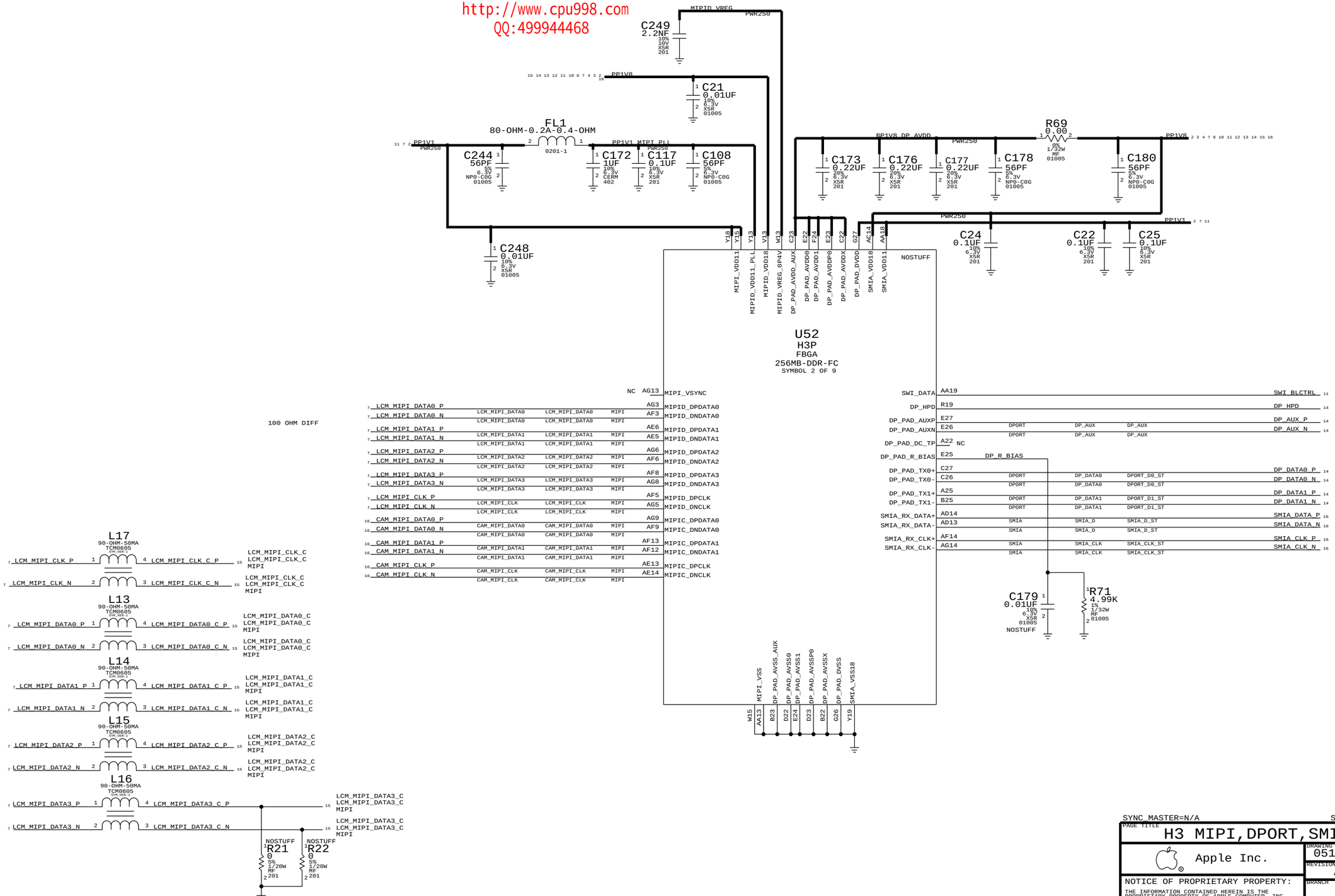

SYNC_MASTER=N/A SYNC_DATE=N/A

PAGE TITLE
H3 MIPI,DPORT,SMIA

Apple Inc.

DRAWING NUMBER 051-7921 SIZE D

REVISION A.0.0

BRANCH

PAGE 7 OF 18

SHEET 7 OF 29

NOTICE OF PROPRIETARY PROPERTY:
THE INFORMATION CONTAINED HEREIN IS THE PROPRIETARY PROPERTY OF APPLE COMPUTER, INC.
THE POSESSOR AGREES TO THE FOLLOWING:
I TO MAINTAIN THIS DOCUMENT IN CONFIDENCE
II NOT TO REPRODUCE OR COPY IT
III NOT TO REVEAL OR PUBLISH IT IN WHOLE OR PART
IV ALL RIGHTS RESERVED

苹果老师维修论坛
http://www.cpu998.com
QQ:499944468

L61 AUDIO INTERFACE

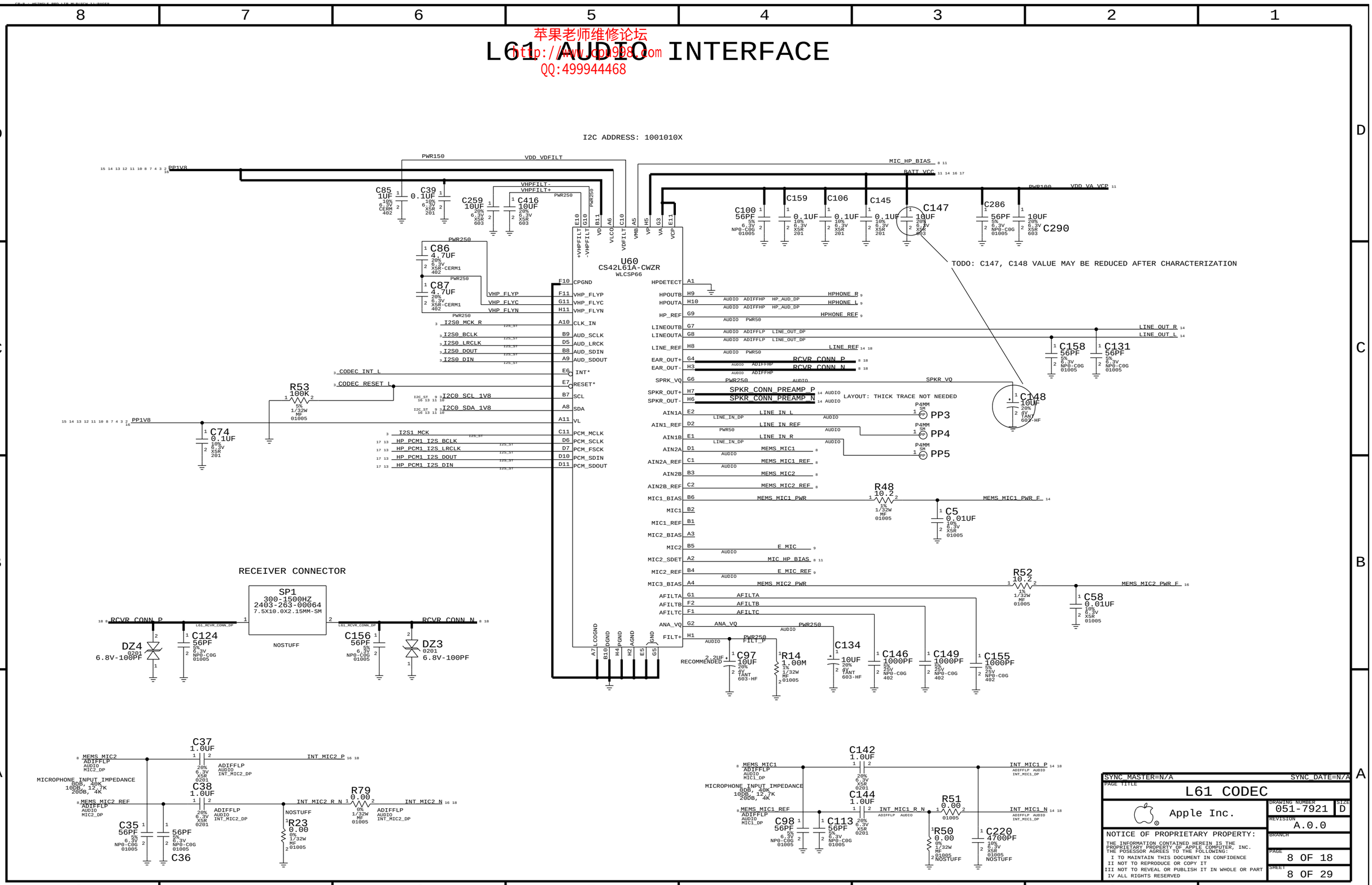

苹果老师维修论坛
http://www.cpu998.com
QQ:499944468

PLACED AT CODEC

PLACED IN CODEC AREA

PLACED BY B2B

TODO: SETUP CONSTRAINT MGR TO MAKE EXT_MIC_P DIFFERENTIAL EXT_MIC_N AND HPHONE_RET_SNS

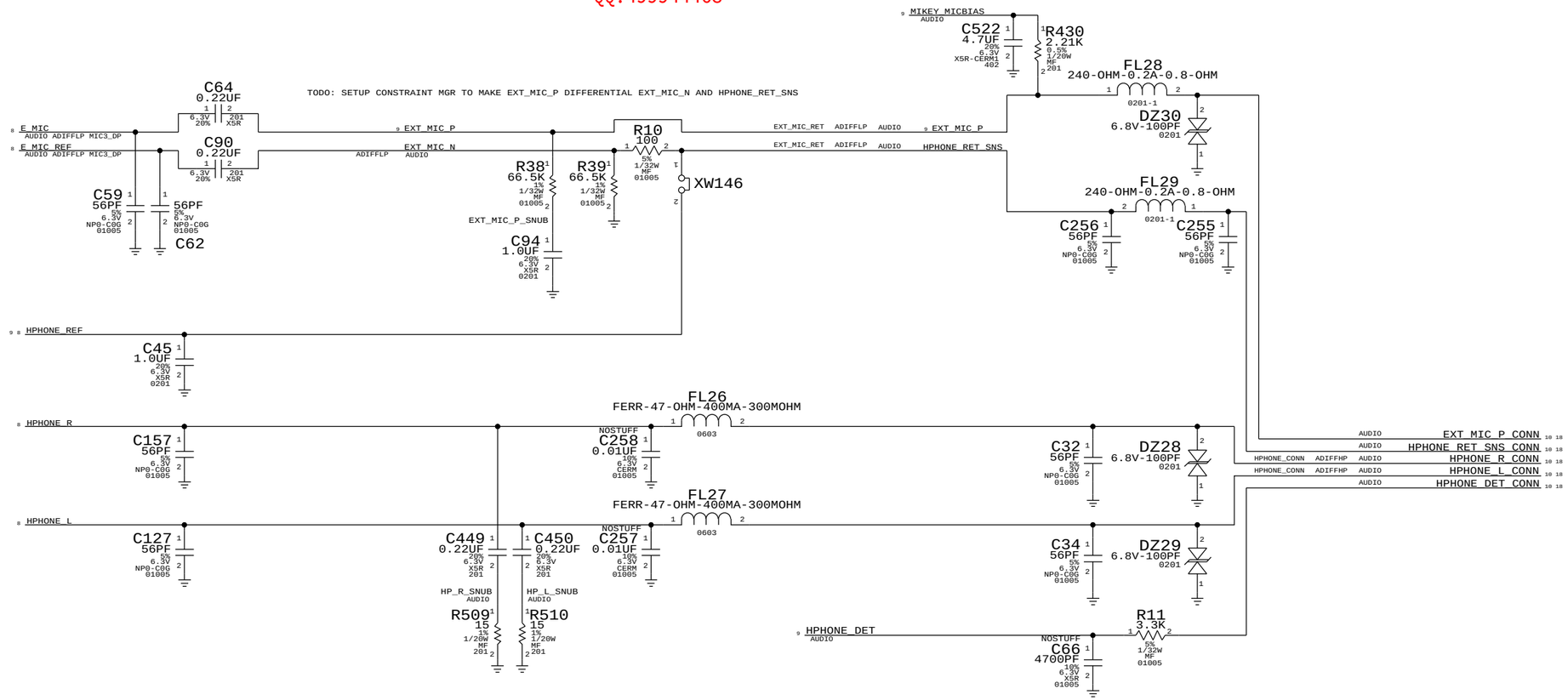

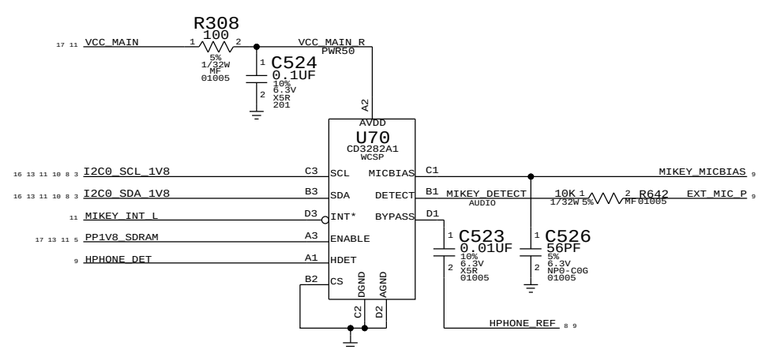

I2C ADDRESS: 0111001X (0X39)

SYNC_MASTER=N/A SYNC_DATE=N/A

PAGE TITLE: HPHONE FILTERS, MIKEY

Apple Inc.

DRAWING NUMBER: 051-7921 SIZE: D

REVISION: A.0.0

BRANCH

PAGE: 9 OF 18

SHEET: 9 OF 29

NOTICE OF PROPRIETARY PROPERTY:
THE INFORMATION CONTAINED HEREIN IS THE PROPRIETARY PROPERTY OF APPLE COMPUTER, INC.
THE POSESSOR AGREES TO THE FOLLOWING:
I TO MAINTAIN THIS DOCUMENT IN CONFIDENCE
II NOT TO REPRODUCE OR COPY IT
III NOT TO REVEAL OR PUBLISH IT IN WHOLE OR PART
IV ALL RIGHTS RESERVED

苹果老师维修论坛
http://www.cpu998.com
QQ:499944468

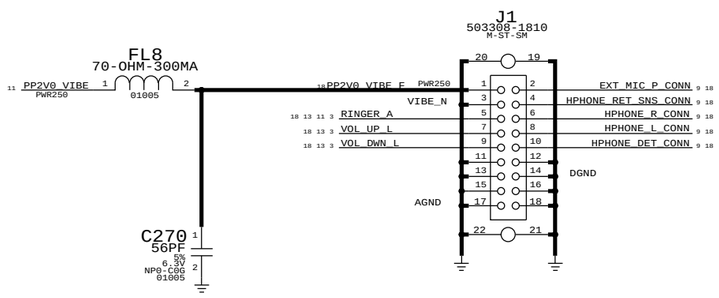

BUTTON FLEX CONNECTOR

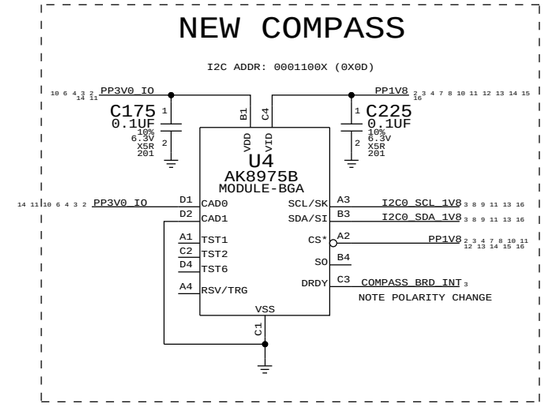

SYNC MASTER=N/A SYNC DATE=N/A

PAGE TITLE
BUTTON B2B, COMPASS

Apple Inc.

DRAWING NUMBER 051-7921 SIZE D

REVISION A.0.0

BRANCH

PAGE 10 OF 18

SHEET 10 OF 29

NOTICE OF PROPRIETARY PROPERTY:
THE INFORMATION CONTAINED HEREIN IS THE PROPRIETARY PROPERTY OF APPLE COMPUTER, INC.
THE POSESSOR AGREES TO THE FOLLOWING:
I TO MAINTAIN THIS DOCUMENT IN CONFIDENCE
II NOT TO REPRODUCE OR COPY IT
III NOT TO REVEAL OR PUBLISH IT IN WHOLE OR PART
IV ALL RIGHTS RESERVED

苹果老师维修论坛
http://www.cpu998.com
QQ:499944468

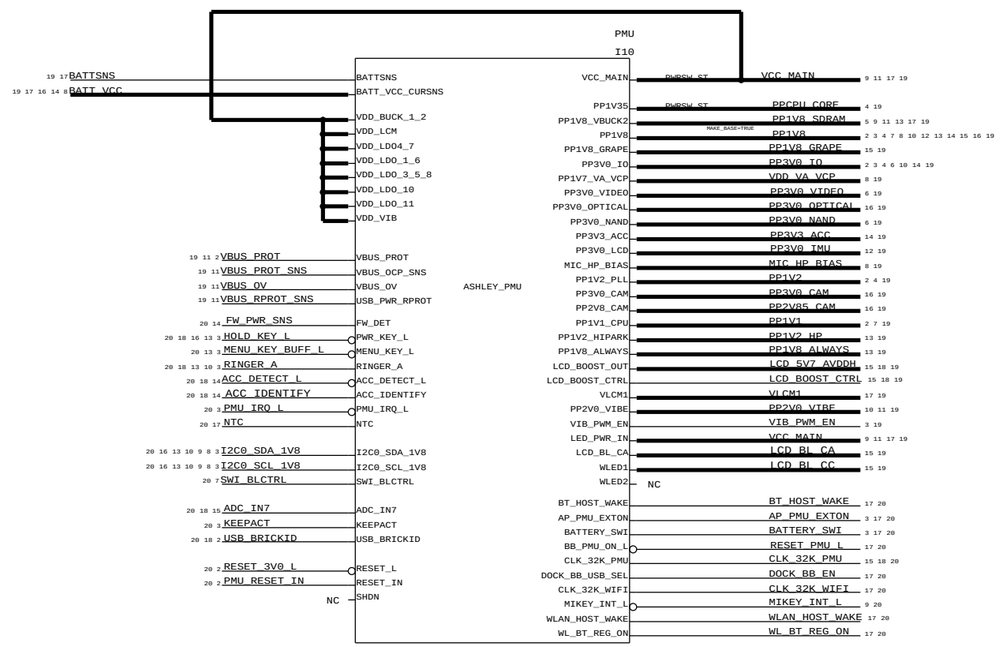

LOCATED ON PP 19 - 20

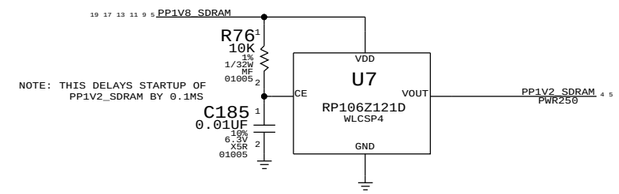

VIBRATOR BOOST

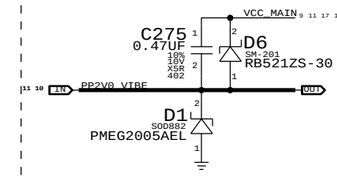

USB OVER/REVERSE VOLTAGE PROTECITON

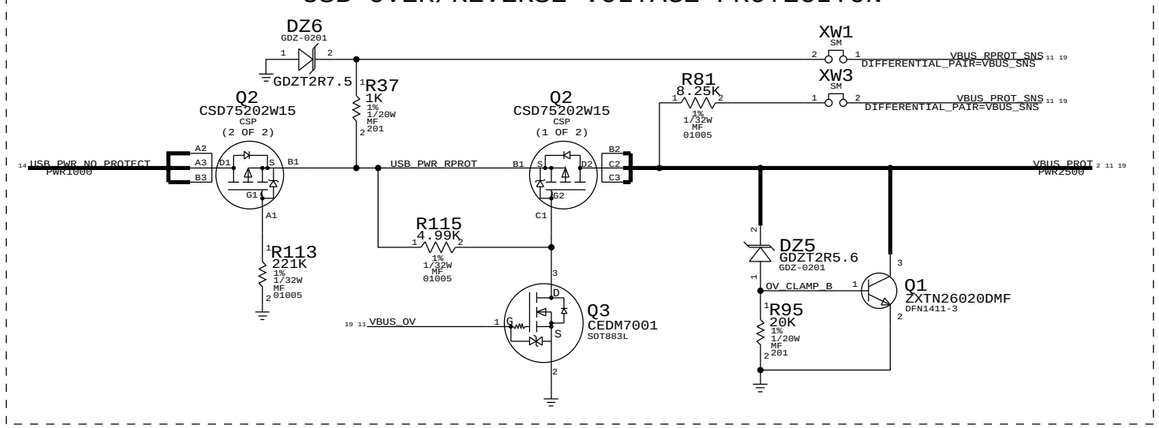

SYNC MASTER=N/A SYNC DATE=N/A

PAGE TITLE

ASHLEY PMU

Apple Inc.

DRAWING NUMBER 051-7921 SIZE D

REVISION A.0.0

BRANCH

PAGE 11 OF 18

SHEET 11 OF 29

NOTICE OF PROPRIETARY PROPERTY:

THE INFORMATION CONTAINED HEREIN IS THE PROPRIETARY PROPERTY OF APPLE COMPUTER, INC.
THE POSESSOR AGREES TO THE FOLLOWING:
I TO MAINTAIN THIS DOCUMENT IN CONFIDENCE
II NOT TO REPRODUCE OR COPY IT
III NOT TO REVEAL OR PUBLISH IT IN WHOLE OR PART
IV ALL RIGHTS RESERVED

苹果老师维修论坛
http://www.cpu998.com
QQ:499944468

ACCELEROMETER

I2C ADDRESS: 0011101X (0X1D)

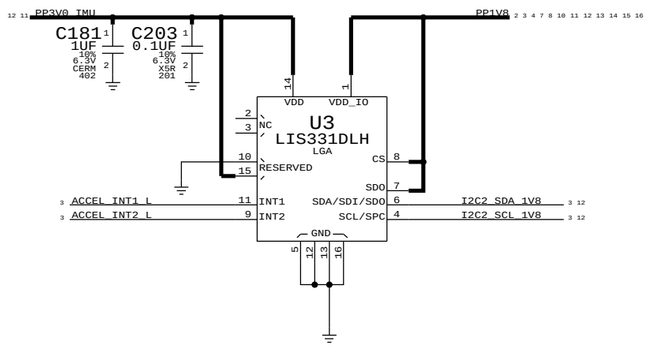

GYRO

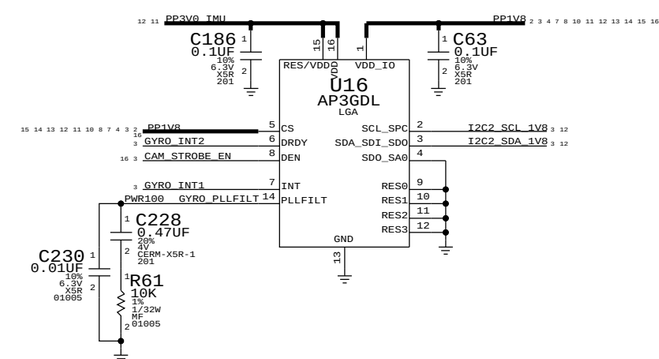

SYNC_MASTER=N/A SYNC_DATE=N/A

PAGE TITLE
ACCEL,GYRO

Apple Inc.

DRAWING NUMBER 051-7921 SIZE D

REVISION A.0.0

BRANCH

PAGE 12 OF 18

SHEET 12 OF 29

NOTICE OF PROPRIETARY PROPERTY:
THE INFORMATION CONTAINED HEREIN IS THE PROPRIETARY PROPERTY OF APPLE COMPUTER, INC.
THE POSESSOR AGREES TO THE FOLLOWING:
I TO MAINTAIN THIS DOCUMENT IN CONFIDENCE
II NOT TO REPRODUCE OR COPY IT
III NOT TO REVEAL OR PUBLISH IT IN WHOLE OR PART
IV ALL RIGHTS RESERVED

苹果老师维修论坛
http://www.cpu998.com
QQ:499944468

HIGHLAND PARK

I2C ADDRESS: 0111110X (0X3E)

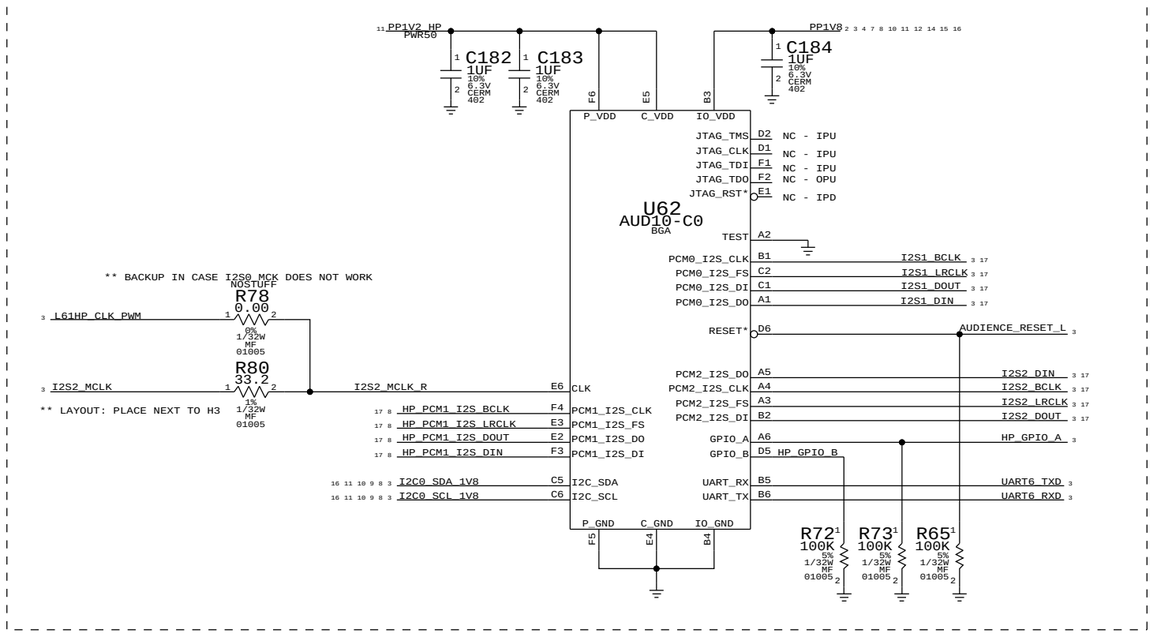

MENU KEY PU, ESD AND BUFFER

BUFFER IS NEEDED BECAUSE OF IT'S LOW V_IH AND LEAKAGE IT MUST BE OPEN DRAIN SO THAT WHEN PP1V8_SDRAM IS DOWN, MENU_KEY_BUFF_L IS PULLED LOW THROUGH R94 AND INTERNAL PULLDOWN IN ASHLEY.

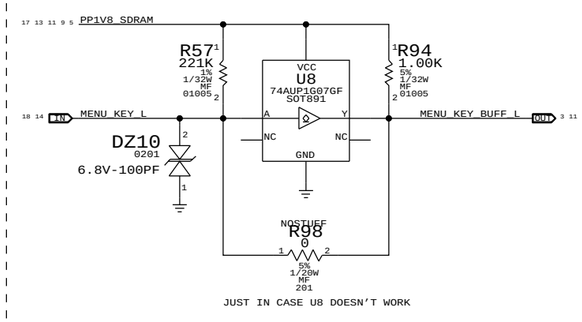

JUST IN CASE U8 DOESN'T WORK

VOLUME SWITCH ESD

RINGER A/B SWITCH PU AND ESD

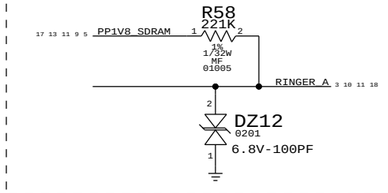

POWER/HOLD KEY PU AND ESD

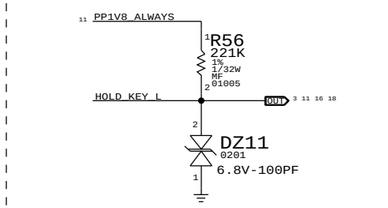

SIM CARD SLOT AND ESD

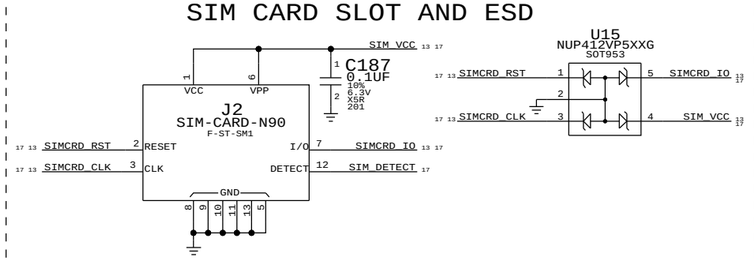

SYNC_MASTER=N/A SYNC_DATE=N/A

PAGE TITLE
HPARK, SWITCH ESD, SIM CARD

Apple Inc.

DRAWING NUMBER 051-7921 SIZE D

REVISION A.0.0

BRANCH

PAGE 13 OF 18

SHEET 13 OF 29

NOTICE OF PROPRIETARY PROPERTY:
THE INFORMATION CONTAINED HEREIN IS THE PROPRIETARY PROPERTY OF APPLE COMPUTER, INC.
THE POSESSOR AGREES TO THE FOLLOWING:
I TO MAINTAIN THIS DOCUMENT IN CONFIDENCE
II NOT TO REPRODUCE OR COPY IT
III NOT TO REVEAL OR PUBLISH IT IN WHOLE OR PART
IV ALL RIGHTS RESERVED

苹果老师维修论坛
http://www.cpu998.com
QQ:499944468

DOCK CONNECTOR

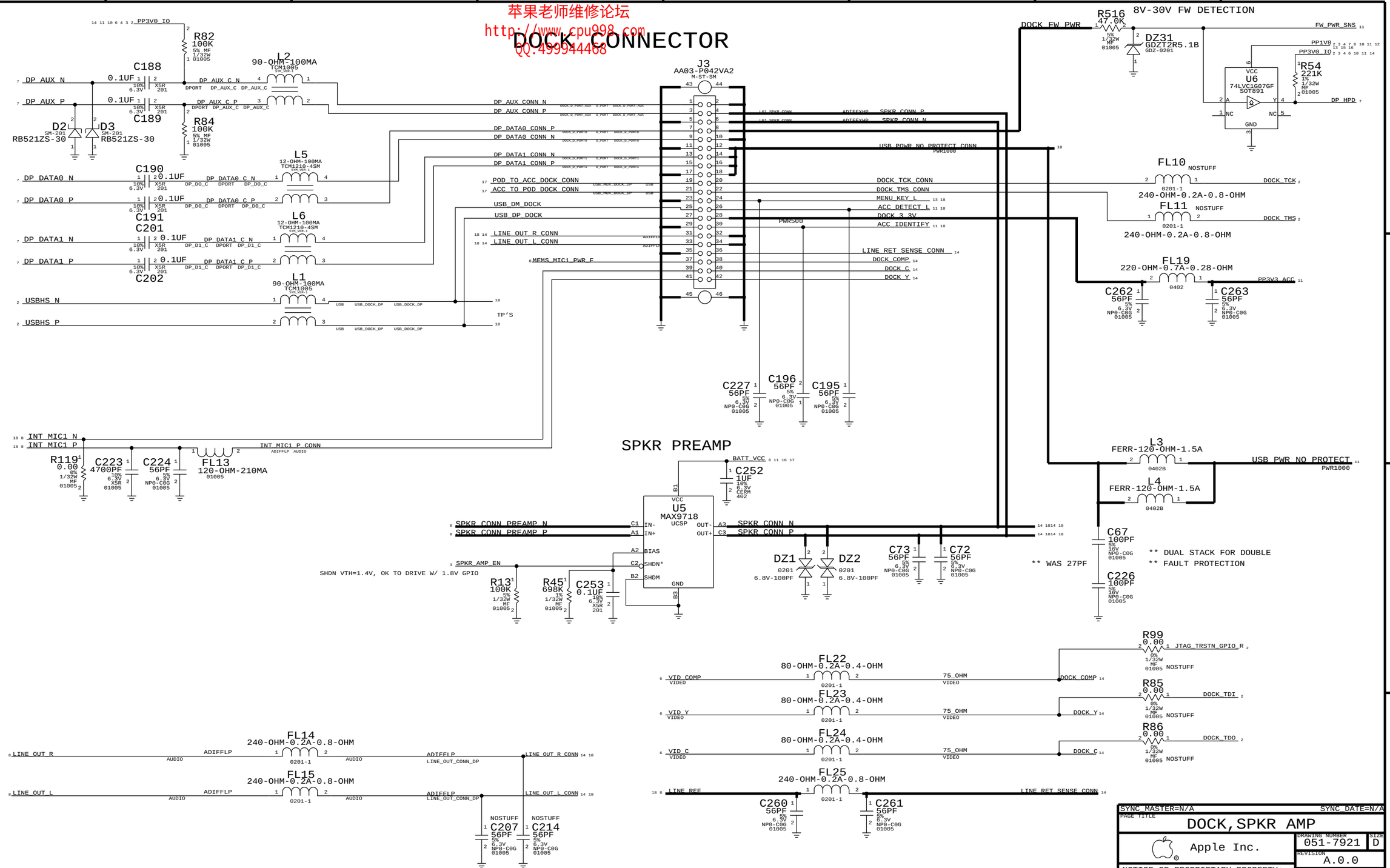

SYNC MASTER=N/A SYNC DATE=N/A

PAGE TITLE: DOCK,SPKR AMP

Apple Inc.

DRAWING NUMBER: 051-7921 SIZE: D

REVISION: A.0.0

BRANCH

PAGE: 14 OF 18

SHEET: 14 OF 29

NOTICE OF PROPRIETARY PROPERTY:
THE INFORMATION CONTAINED HEREIN IS THE PROPRIETARY PROPERTY OF APPLE COMPUTER, INC.
THE POSESSOR AGREES TO THE FOLLOWING:
I TO MAINTAIN THIS DOCUMENT IN CONFIDENCE
II NOT TO REPRODUCE OR COPY IT
III NOT TO REVEAL OR PUBLISH IT IN WHOLE OR PART
IV ALL RIGHTS RESERVED

苹果老师维修论坛
http://www.cpu998.com
QQ:499944468

NIMBUS

U19
F761586GZCKR
BGA

Pin	Signal	Net
B4	IN[0]	NIMBUS_PANEL_IN<0>
A3	IN[1]	NIMBUS_PANEL_IN<1>
B3	IN[2]	NIMBUS_PANEL_IN<2>
A2	IN[3]	NIMBUS_PANEL_IN<3>
A1	IN[4]	NIMBUS_PANEL_IN<4>
B2	IN[5]	NIMBUS_PANEL_IN<5>
B1	IN[6]	NIMBUS_PANEL_IN<6>
C2	IN[7]	NIMBUS_PANEL_IN<7>
C1	IN[8]	NIMBUS_PANEL_IN<8>
C3	IN[9]	NIMBUS_PANEL_IN<9>
A4	IR_IN	NC
A6	LDO_IN	GRAPE_LDO_IN (PWR250)
B7	CPY0	CPY0 (PWR250)
B8	CPX0	CPX0 (PWR250)
A7	CPY1	CPY1 (PWR250)
A8	CPX1	CPX1 (PWR250)
C5	BOOT_CFG[0]	
C4	BOOT_CFG[1]	
D4	JTAG_TMS	
D5	JTAG_TDI	
D2	JTAG_TCK	
E4	JTAG_TDO	
D6	JTAG_RTCK/TM[0]	
D3	TM1	
E3	RESET*	GRAPE_RESET_L
E8	CLK_IN	CLK_32K_PMU
E2	VSTM[0]	NIMBUS_VSTM_OUT<0>
E1	VSTM[1]	NIMBUS_VSTM_OUT<1>
F2	VSTM[2]	NIMBUS_VSTM_OUT<2>
F1	VSTM[3]	NIMBUS_VSTM_OUT<3>
F3	VSTM[4]	NIMBUS_VSTM_OUT<4>
G1	VSTM[5]	NIMBUS_VSTM_OUT<5>
G2	VSTM[6]	NIMBUS_VSTM_OUT<6>
H1	VSTM[7]	NIMBUS_VSTM_OUT<7>
H2	VSTM[8]	NIMBUS_VSTM_OUT<8>
G3	VSTM[9]	NIMBUS_VSTM_OUT<9>
H3	VSTM[10]	NIMBUS_VSTM_OUT<10>
G4	VSTM[11]	NIMBUS_VSTM_OUT<11>
H4	VSTM[12]	NIMBUS_VSTM_OUT<12>
G5	VSTM[13]	NIMBUS_VSTM_OUT<13>
H5	VSTM[14]	NIMBUS_VSTM_OUT<14>
H6	INT*/GPIO[0]	NIMBUS_INT_L
E7	GO/GPIO[1]	
F7	I2C/GPIO[2]	
F8	I2C/GPIO[3]	
F6	SYNC_GPIO[4]	
C6	IR_DRV_GPIO[5]	
F4	A_CS*/GPIO[6]	NIMBUS_PANEL_CONFIG
E6	A_SCLLK_GPIO[7]	NIMBUS_PRODUCT_CONFIG, NC=IPHONE
F5	A_SDO_GPIO[8]	
E5	A_SDI_GPIO[9]	GND=N90
G7	H_CS*	SPI1_CS_L
G8	H_SCLK	SPI1_SCLK
H7	H_SDI	SPI1_MOSI
H8	H_SDO	SPI1_MISO_R
D7	3.3V_OUT	NC
A5	GND	
D1	GND	
D8	GND	
G6	GND	
B5	VDD_ANA	VDD_ANA (PWR500)
B6	VDD_CORE	VDD_GRAPE_CORE (PWR250)
C7	VDD_IO	GRAPE_VDD_IO
C8	VDD_H	VDD_H (PWR500)

PP16 P4MM SM
PP17 P4MM SM
R16 0.1 1% 1/20W MF 201 (PP1V8_GRAPE)
C205 4.7UF 20% 6.3V X5R-CERM1 402
C206 4.7UF 20% 6.3V X5R-CERM1 402
C198 4.7UF 20% 6.3V X5R-CERM1 402
C200 0.47UF 20% 4V CERM-X5R-1 201
PP11 P4MM SM
PP10 P4MM SM
R74 10.2 1% 1/20W MF 201
R90 1.00M 1% 1/32W MF 01005
C212 4.7UF 20% 6.3V X5R-CERM 402
R91 510K 5% 1/32W MF 01005
C208 4.7UF 20% 6.3V X5R-CERM1 402
C210 4.7UF 20% 6.3V X5R-CERM 402
R30 10 1% 1/20W MF 201
C211 0.47UF 20% 4V CERM-X5R-1 201
PP18 P4MM SM

GRAPE CONNECTOR
N90 NIMBUS CONNECTOR

J5
AA03-S030VA1
F-ST-SM

(POUR GND ON UPPER &LOWER LAYER)
(GUARDED BY GND ON SAME LAYER)

Pin	Net
1	NIMBUS_VSTM_OUT<0>
3	NIMBUS_VSTM_OUT<3>
5	NIMBUS_VSTM_OUT<2>
7	NIMBUS_VSTM_OUT<5>
9	NIMBUS_VSTM_OUT<4>
11	NIMBUS_VSTM_OUT<6>
13	NIMBUS_VSTM_OUT<9>
15	NIMBUS_VSTM_OUT<7>
17	NIMBUS_VSTM_OUT<8>
19	NIMBUS_VSTM_OUT<10>
21	NIMBUS_VSTM_OUT<11>
23	
25	NIMBUS_VSTM_OUT<12>
27	NIMBUS_VSTM_OUT<13>
29	NIMBUS_VSTM_OUT<14>
2	NIMBUS_PANEL_IN<0>
4	NIMBUS_PANEL_IN<1>
6	NIMBUS_PANEL_IN<2>
8	NIMBUS_PANEL_IN<3>
10	NIMBUS_PANEL_IN<4>
12	NIMBUS_PANEL_IN<5>
14	NIMBUS_PANEL_IN<6>
16	NIMBUS_PANEL_IN<7>
18	NIMBUS_PANEL_IN<8>
20	NIMBUS_PANEL_IN<9>
22	
24	
26	NIMBUS_VSTM_OUT<1>
28	NIMBUS_PANEL_CONFIG
30	
31, 32, 33, 34	GND

N90 LCD CONNECTOR

J4
AXE426124
M-ST-SM

Pin	Net
1	LCD_BL_CA_F
3	LCD_BL_CC_F
5	LCD_5V7_AVDDH
7	PP1V8_LCM_CONN
9	LCD_BOOST_CTRL
11	
13	LCD_HIFA
15	* STSTB
17	LCD_PIFA
19	
21	LCM_MIPI_DATA3_C_P
23	LCM_MIPI_DATA3_C_N
25	
2	LCM_MIPI_DATA0_C_P
4	LCM_MIPI_DATA0_C_N
6	
8	
10	LCM_MIPI_DATA1_C_P
12	LCM_MIPI_DATA1_C_N
14	
16	LCM_MIPI_CLK_C_P
18	LCM_MIPI_CLK_C_N
20	
22	LCM_MIPI_DATA2_C_P
24	LCM_MIPI_DATA2_C_N
26	
27, 28, 29, 30	GND

FL4 0201-1 240-OHM-0.2A-0.8-OHM (LCD_BL_CA)
FL3 0201-1 240-OHM-0.2A-0.8-OHM (LCD_BL_CC)
FL7 0201-1 80-OHM-0.2A-0.4-OHM (PP1V8_LCM_CONN, PP1V8)
C204 0.1UF 10% 6.3V X5R 201
C245 56PF 5% 6.3V NP0-C0G 01005
C273 33PF 5% 25V NP0-C0G 201 (NOSTUFF)
C405 56PF 5% 6.3V NP0-C0G 01005
TP13 TP-P6

** THESE 10 CAPS ARE TO REPLACE 1 4.7 UF CAP IN ORDER TO REDUCE HEIGHT IN THE FORHEAD AREA

LCD_5V7_AVDDH
C68 1.0UF 20% 6.3V X5R 0201
C70 1.0UF 20% 6.3V X5R 0201
C76 1.0UF 20% 6.3V X5R 0201
C83 1.0UF 20% 6.3V X5R 0201
C89 1.0UF 20% 6.3V X5R 0201
C69 1.0UF 20% 6.3V X5R 0201
C75 1.0UF 20% 6.3V X5R 0201
C82 1.0UF 20% 6.3V X5R 0201
C84 1.0UF 20% 6.3V X5R 0201
C91 1.0UF 20% 6.3V X5R 0201

TODO: DO WE NEED A PI-FILTER FOR CONTROL LINES?

SYNC_MASTER=N/A SYNC_DATE=N/A

PAGE TITLE
NIMBUS, GRAPE, LCD CONN.

Apple Inc.

DRAWING NUMBER 051-7921 SIZE D
REVISION A.0.0
BRANCH
PAGE 15 OF 18
SHEET 15 OF 29

NOTICE OF PROPRIETARY PROPERTY:
THE INFORMATION CONTAINED HEREIN IS THE PROPRIETARY PROPERTY OF APPLE COMPUTER, INC.
THE POSESSOR AGREES TO THE FOLLOWING:
I TO MAINTAIN THIS DOCUMENT IN CONFIDENCE
II NOT TO REPRODUCE OR COPY IT
III NOT TO REVEAL OR PUBLISH IT IN WHOLE OR PART
IV ALL RIGHTS RESERVED

苹果老师维修论坛
http://www.cpu998.com
QQ:499944468

5MP CAMERA CONNECTOR

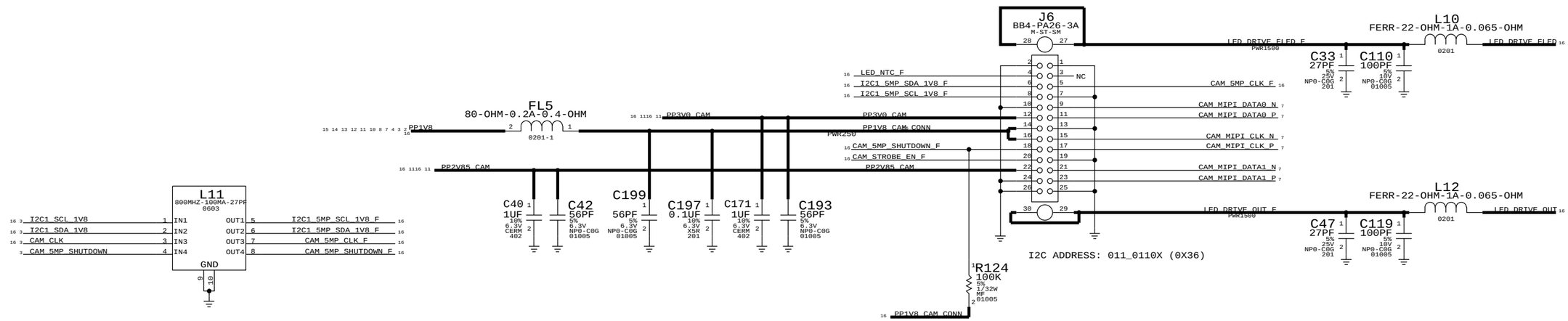

VGA CAMERA CONN

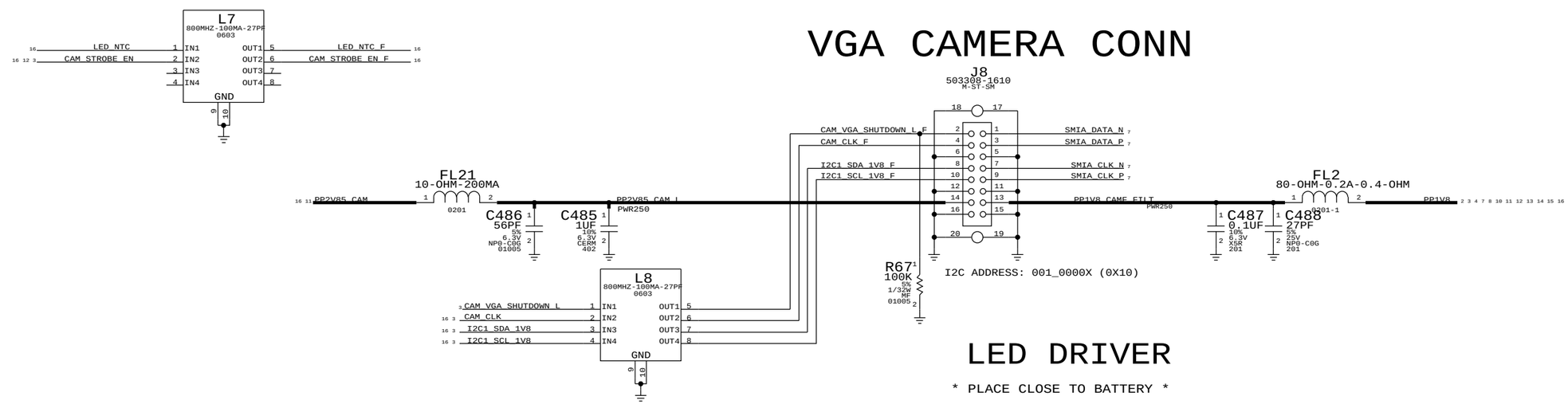

LED DRIVER

* PLACE CLOSE TO BATTERY *

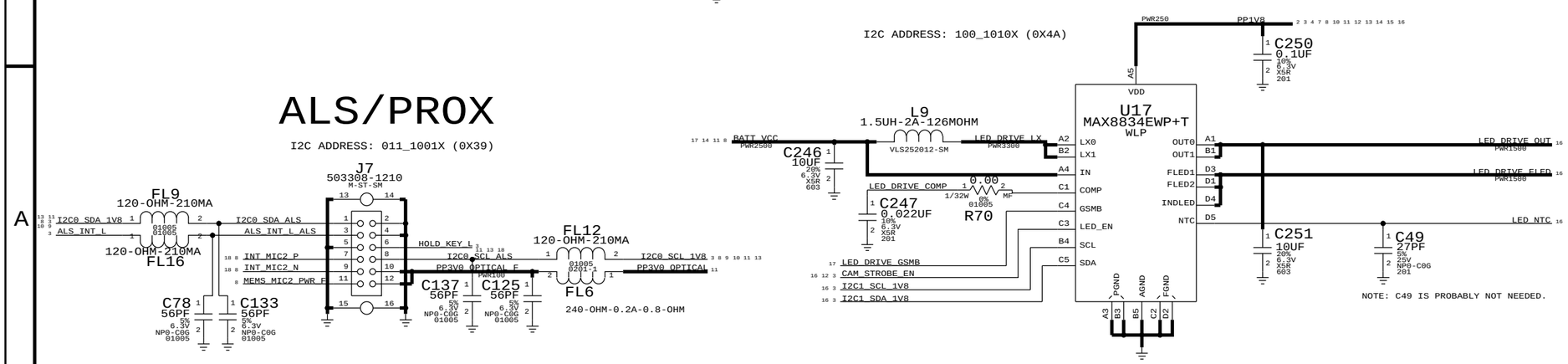

ALS/PROX

I2C ADDRESS: 011_1001X (0X39)

SYNC MASTER=N/A	SYNC DATE=N/A
PAGE TITLE: CAMERA,STROBE,SENSOR B2B	
Apple Inc.	DRAWING NUMBER 051-7921 SIZE D
	REVISION A.0.0
	BRANCH
	PAGE 16 OF 18
	SHEET 16 OF 29

NOTICE OF PROPRIETARY PROPERTY:
THE INFORMATION CONTAINED HEREIN IS THE PROPRIETARY PROPERTY OF APPLE COMPUTER, INC.
THE POSESSOR AGREES TO THE FOLLOWING:
I TO MAINTAIN THIS DOCUMENT IN CONFIDENCE
II NOT TO REPRODUCE OR COPY IT
III NOT TO REVEAL OR PUBLISH IT IN WHOLE OR PART
IV ALL RIGHTS RESERVED

苹果老师维修论坛
http://www.cpu998.com
QQ:499944468

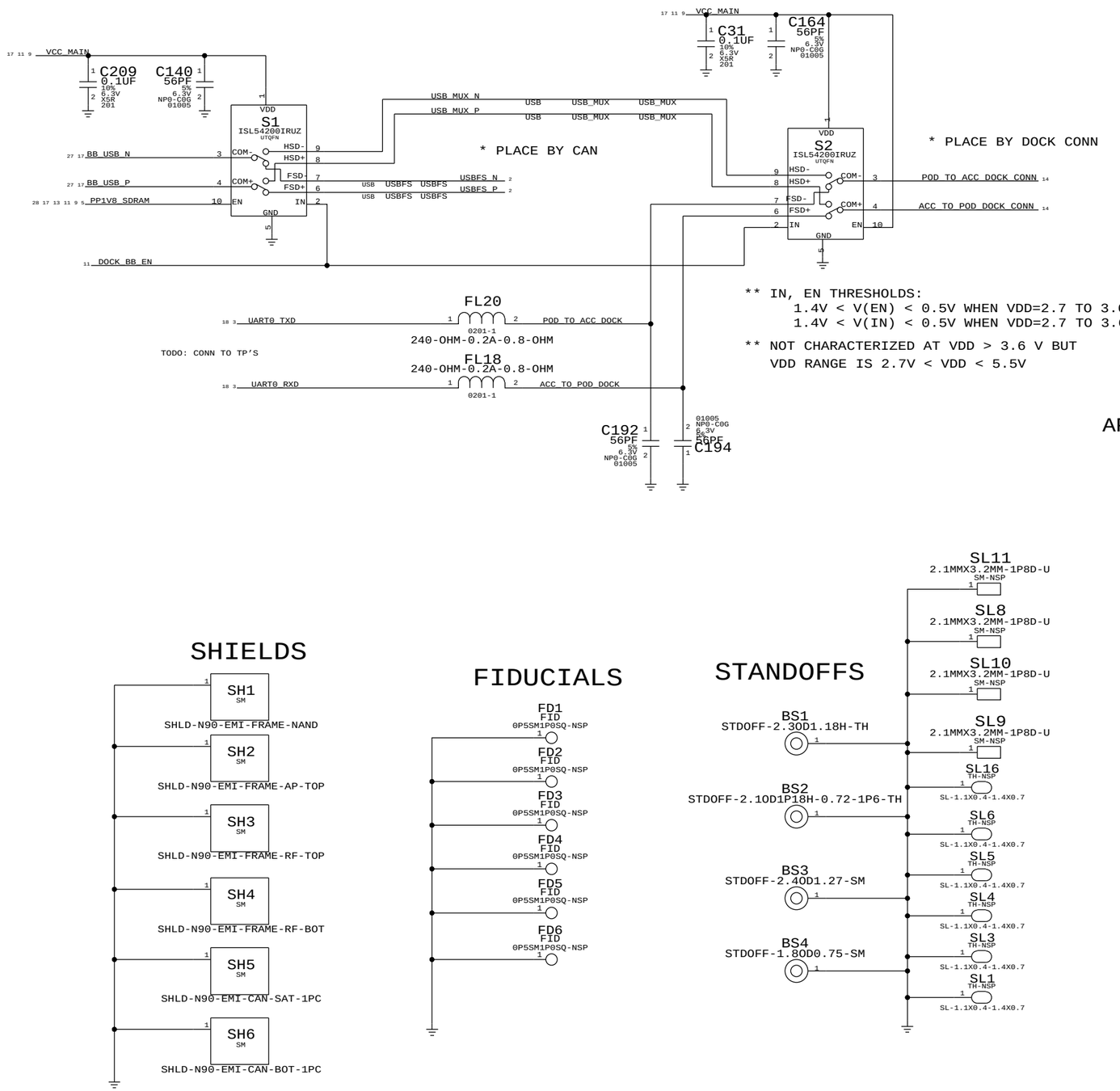

AP/RADIO INTERFACE

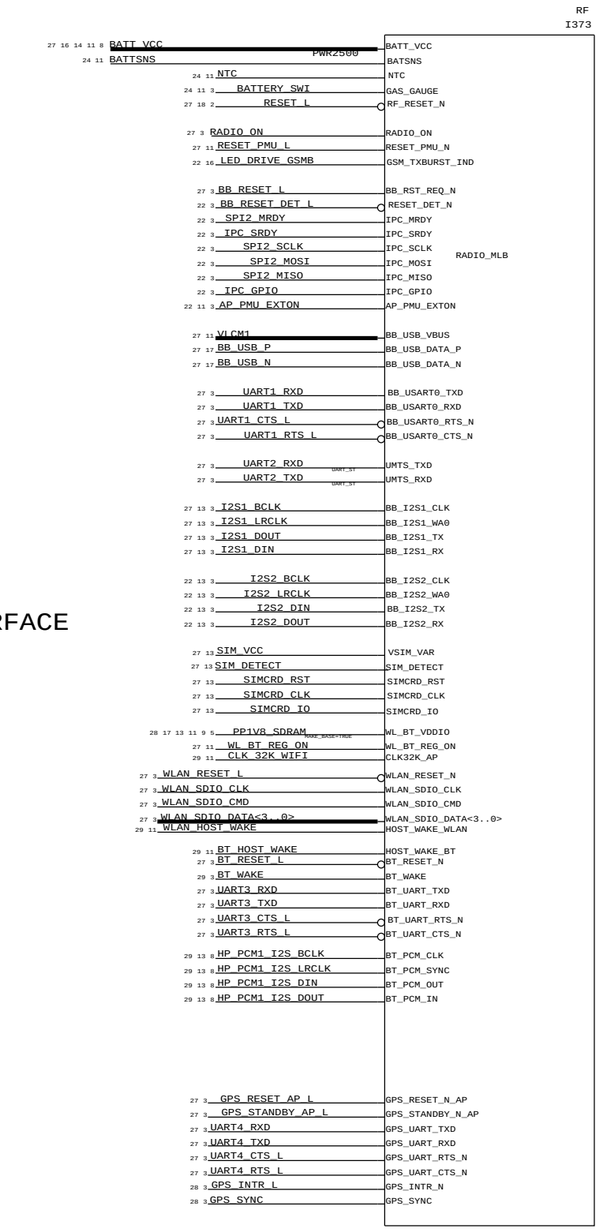

SHIELDS

FIDUCIALS

STANDOFFS

SYNC_MASTER=N/A SYNC_DATE=N/A

PAGE TITLE
RADIO,USB MUX,EM PARTS

Apple Inc.

DRAWING NUMBER 051-7921 SIZE D

REVISION A.0.0

BRANCH

PAGE 17 OF 18

SHEET 17 OF 29

NOTICE OF PROPRIETARY PROPERTY:
THE INFORMATION CONTAINED HEREIN IS THE PROPRIETARY PROPERTY OF APPLE COMPUTER, INC.
THE POSESSOR AGREES TO THE FOLLOWING:
I TO MAINTAIN THIS DOCUMENT IN CONFIDENCE
II NOT TO REPRODUCE OR COPY IT
III NOT TO REVEAL OR PUBLISH IT IN WHOLE OR PART
IV ALL RIGHTS RESERVED

苹果老师维修论坛
http://www.cpu998.com
QQ:499944468

GPIO

TODO: CONN TO TP'S

3	FORCE_DFU	TP421	NOSTUFF
16 13 11 3	HOLD_KEY_L	TP412	NOSTUFF
14 13	MENU_KEY_L	TP423	NOSTUFF
13 11 10 3	RINGER_A	TP424	NOSTUFF
13 10 3	VOL_UP_L	TP415	NOSTUFF
13 10 3	VOL_DWN_L	TP425	NOSTUFF

TEST

2	TST_CLKOUT	TP8	NOSTUFF

GRAPE

15 3	NIMBUS_INT_L	PP8 (P4MM SM)	
15 3	SPI1_SCLK (SPI_ST)	PP9 (P4MM SM)	
15 11	CLK_32K_PMU	TP477	NOSTUFF

LCM

15	LCD_BL_CC_F	TP465	NOSTUFF
15	LCD_BL_CA_F	TP466	NOSTUFF
15 11	LCD_5V7_AVDDH	TP468	NOSTUFF
15 11	LCD_BOOST_CTRL	TP469	NOSTUFF

UART

17 3	UART0_TXD	TP449	NOSTUFF
17 3	UART0_RXD	TP450	NOSTUFF

USB

14	USB_DP_DOCK	TP451	NOSTUFF
14	USB_DM_DOCK	TP452	NOSTUFF

ACCESSORY DETECT

14 11	ACC_DETECT_L	TP474	NOSTUFF
14 11	ACC_IDENTIFY	TP475	NOSTUFF

POWER

15 11	ADC_IN7	TP457	NOSTUFF
14	USB_POWR_NO_PROTECT_CONN	TP455	NOSTUFF
11 2	USB_BRICKID	TP5	NOSTUFF
10	PP2V0_VIBE_F	TP7	NOSTUFF

AUDIO

SPEAKER

14	SPKR_CONN_P	TP429	NOSTUFF
14	SPKR_CONN_N	TP430	NOSTUFF

RECEIVER

8	RCVR_CONN_P	TP413	NOSTUFF
8	RCVR_CONN_N	TP431	NOSTUFF

MIC

14 8	INT_MIC1_P	TP432	NOSTUFF
14 8	INT_MIC1_N	TP433	NOSTUFF
16 8	INT_MIC2_P	TP10	NOSTUFF
16 8	INT_MIC2_N	TP11	NOSTUFF

LINE OUT

14	LINE_OUT_L_CONN	TP1	NOSTUFF
14	LINE_OUT_R_CONN	TP2	NOSTUFF
14 8	LINE_REF (PWR50 AUDIO)	TP3	NOSTUFF

HEADPHONE

10 9	EXT_MIC_P_CONN	TP438	NOSTUFF
10 9	HPHONE_RET_SNS_CONN	TP12	NOSTUFF
10 9	HPHONE_R_CONN	TP440	NOSTUFF
10 9	HPHONE_L_CONN	TP441	NOSTUFF
10 9	HPHONE_DET_CONN	TP442	NOSTUFF

SIGNAL GND(SENSE)

TP443 NOSTUFF

POWER GND

TP444 NOSTUFF (TP-1P0-TOP)

TP447 NOSTUFF (TP-1P0-TOP)

RESET

17 2	RESET_L	TP6	NOSTUFF

SYNC_MASTER=N/A SYNC_DATE=N/A

PAGE TITLE: TEST POINTS

Apple Inc.

DRAWING NUMBER: 051-7921 SIZE: D

REVISION: A.0.0

BRANCH

PAGE: 18 OF 18

SHEET: 18 OF 29

NOTICE OF PROPRIETARY PROPERTY:
THE INFORMATION CONTAINED HEREIN IS THE PROPRIETARY PROPERTY OF APPLE COMPUTER, INC.
THE POSESSOR AGREES TO THE FOLLOWING:
I TO MAINTAIN THIS DOCUMENT IN CONFIDENCE
II NOT TO REPRODUCE OR COPY IT
III NOT TO REVEAL OR PUBLISH IT IN WHOLE OR PART
IV ALL RIGHTS RESERVED

1. ALL RESISTANCE VALUES ARE IN OHMS, 0.1 WATT +/- 5%.
2. ALL CAPACITANCE VALUES ARE IN MICROFARADS.
3. ALL CRYSTALS & OSCILLATOR VALUES ARE IN HERTZ.

N90 ASHLEY_PMU SUB-DESIGN
Thu Mar 18 14:15:23 2010

苹果老师维修论坛
http://www.cpu998.com
QQ:499944468

REV	ECN	DESCRIPTION OF REVISION	CK APPD / DATE
A	0000880153	PRODUCTION RELEASED	2010-03-23

LAYOUT: PLACE XW1 AND XW2 REMOTELY BY AP

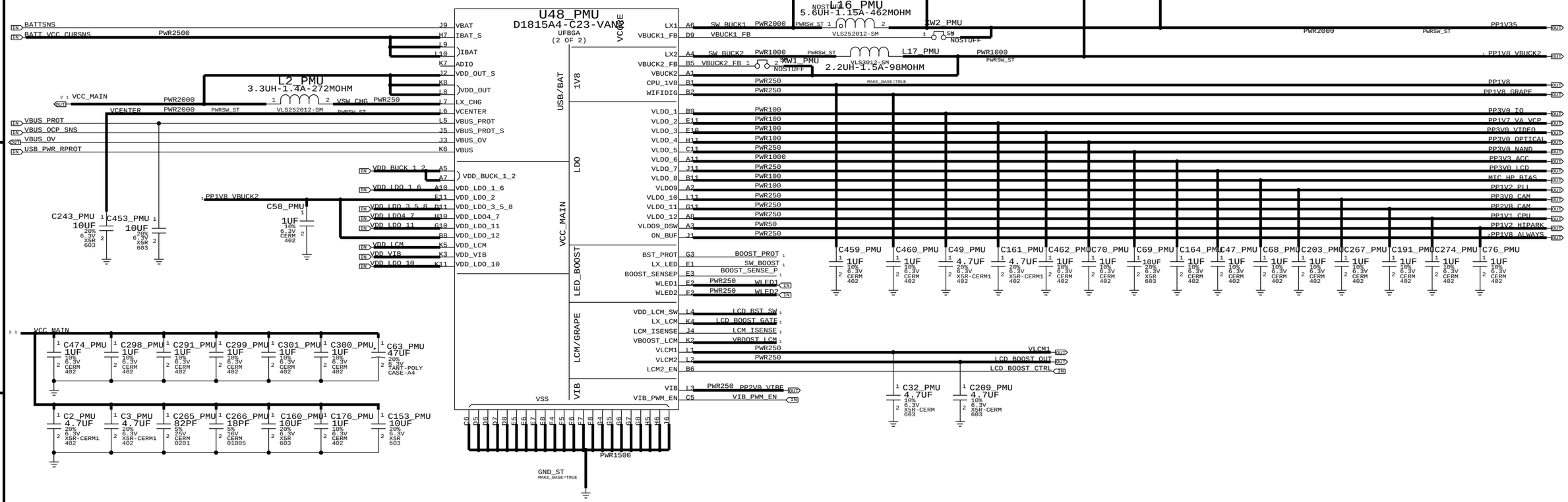

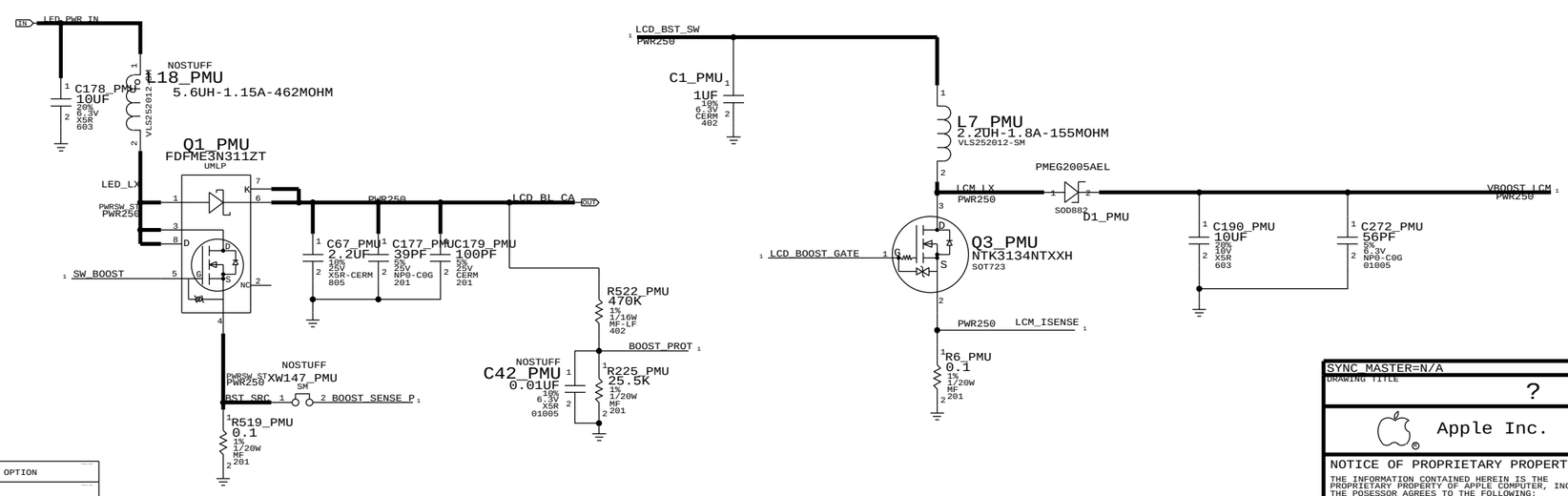

SCH # : 051-8351

PART#	QTY	DESCRIPTION	REFERENCE DESIGNATOR(S)	CRITICAL	BOM OPTION
607-6809	1	TDK POWER INDUCTORS	L1_PMU,L3_PMU,L16_PMU,L18_PMU	Y	?

SYNC_MASTER=N/A SYNC_DATE=N/A

DRAWING TITLE: ?

Apple Inc.

DRAWING NUMBER: 051-7921 SIZE: D

REVISION: A.0.0

BRANCH

PAGE: 1 OF 2

SHEET: 19 OF 29

NOTICE OF PROPRIETARY PROPERTY:
THE INFORMATION CONTAINED HEREIN IS THE PROPRIETARY PROPERTY OF APPLE COMPUTER, INC.
THE POSESSOR AGREES TO THE FOLLOWING:
I TO MAINTAIN THIS DOCUMENT IN CONFIDENCE
II NOT TO REPRODUCE OR COPY IT
III NOT TO REVEAL OR PUBLISH IT IN WHOLE OR PART
IV ALL RIGHTS RESERVED

苹果老师维修论坛
http://www.cpu998.com
QQ:499944468

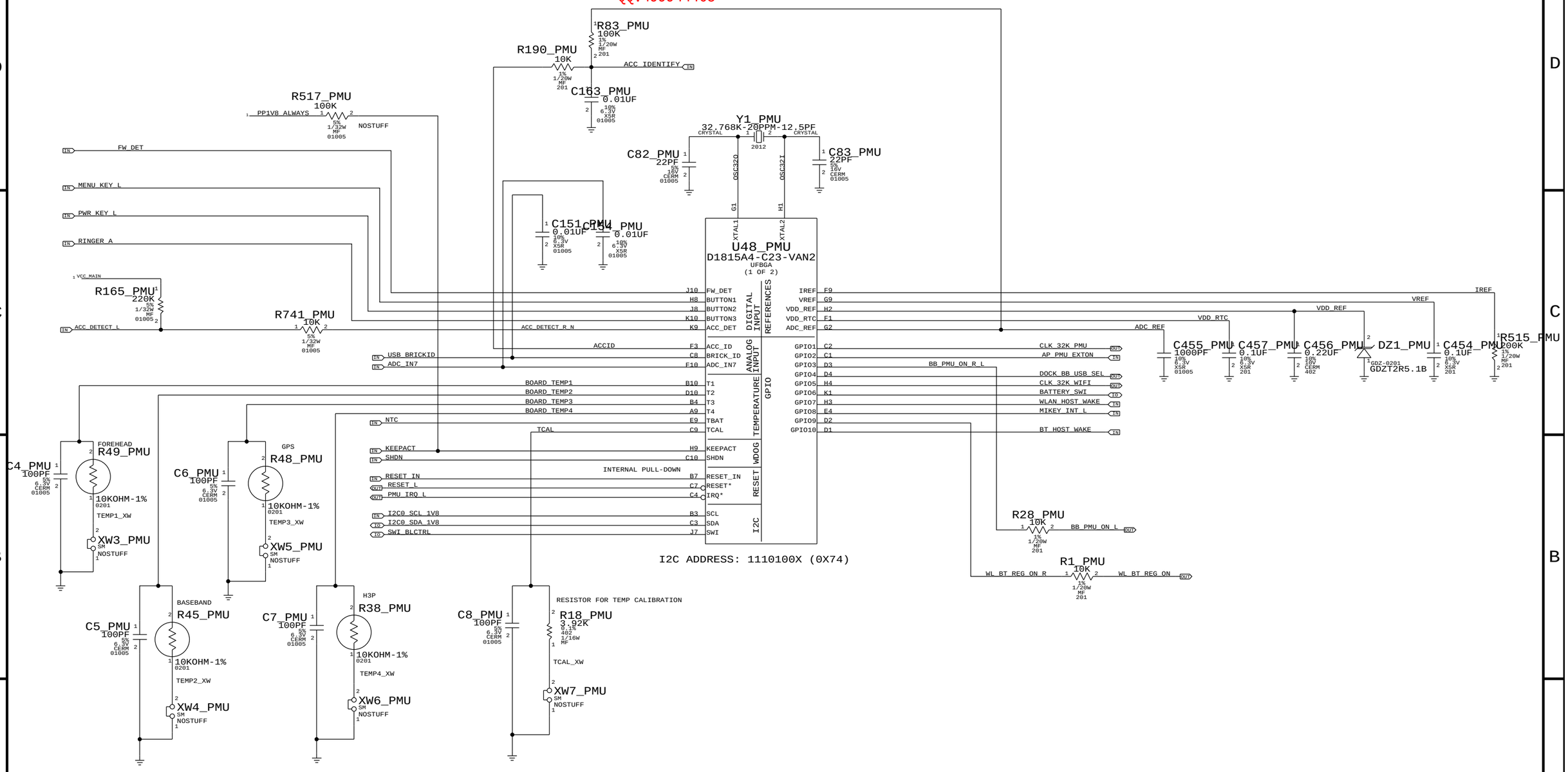

SYNC_MASTER=N/A SYNC_DATE=N/A

PAGE TITLE	ASHLEY PMU
Apple Inc.	DRAWING NUMBER 051-7921 SIZE D
	REVISION A.0.0
NOTICE OF PROPRIETARY PROPERTY:	BRANCH
THE INFORMATION CONTAINED HEREIN IS THE PROPRIETARY PROPERTY OF APPLE COMPUTER, INC. THE POSESSOR AGREES TO THE FOLLOWING: I TO MAINTAIN THIS DOCUMENT IN CONFIDENCE II NOT TO REPRODUCE OR COPY IT III NOT TO REVEAL OR PUBLISH IT IN WHOLE OR PART IV ALL RIGHTS RESERVED	PAGE 2 OF 2
	SHEET 20 OF 29

1. ALL RESISTANCE VALUES ARE IN OHMS, 0.1 WATT +/- 5%.
2. ALL CAPACITANCE VALUES ARE IN MICROFARADS.
3. ALL CRYSTALS & OSCILLATOR VALUES ARE IN HERTZ.

苹果老师维修论坛
http://www.cpu998.com
QQ:499944468

REV	ECN	DESCRIPTION OF REVISION	CK APPD / DATE
A	0000880153	PRODUCTION RELEASED	2010-03-23

N90 (ICE3) HSPA RADIO
PVT - 04/15/10:BRD REV9

PAGE	CONTENTS
02	BASEBAND I/O
03	BASEBAND + MEMORY
04	BASEBAND POWER SUPPLY
05	GSM & UMTS TRANSCEIVER
06	POWER AMPS AND RF FRONT END
07	SYSTEM CONNECTORS
08	A-GPS
09	WLAN/BLUETOOTH RADIO

BOARD - 920-XXXX
SCHEMATIC - 951-XXXX
BOM - 630-XXXX

DRAWING TITLE: TITLE PAGE

Apple Inc.

DRAWING NUMBER: 051-7921 SIZE: D
REVISION: A.0.0
BRANCH:
PAGE: 1 OF 9
SHEET: 21 OF 29

NOTICE OF PROPRIETARY PROPERTY:
THE INFORMATION CONTAINED HEREIN IS THE PROPRIETARY PROPERTY OF APPLE COMPUTER, INC.
THE POSESSOR AGREES TO THE FOLLOWING:
I TO MAINTAIN THIS DOCUMENT IN CONFIDENCE
II NOT TO REPRODUCE OR COPY IT
III NOT TO REVEAL OR PUBLISH IT IN WHOLE OR PART
IV ALL RIGHTS RESERVED

BASEBAND I/O

苹果老师维修论坛
http://www.cpu998.com
QQ:499944468

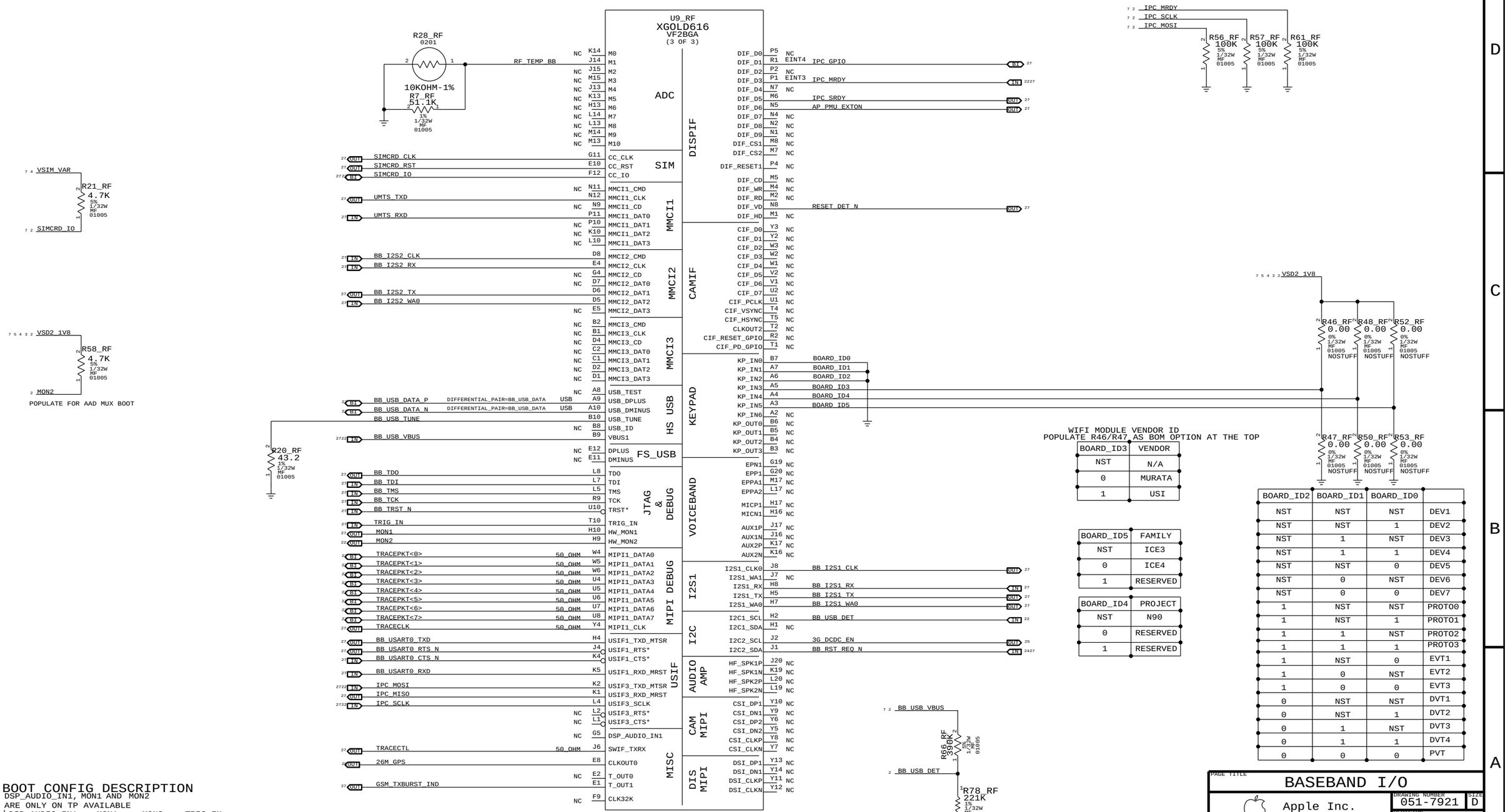

WIFI MODULE VENDOR ID
POPULATE R46/R47 AS BOM OPTION AT THE TOP

BOARD_ID3	VENDOR
NST	N/A
0	MURATA
1	USI

BOARD_ID5	FAMILY
NST	ICE3
0	ICE4
1	RESERVED

BOARD_ID4	PROJECT
NST	N90
0	RESERVED
1	RESERVED

BOARD_ID2	BOARD_ID1	BOARD_ID0	
NST	NST	NST	DEV1
NST	NST	1	DEV2
NST	1	NST	DEV3
NST	1	1	DEV4
NST	NST	0	DEV5
NST	0	NST	DEV6
NST	0	0	DEV7
1	NST	NST	PROTO0
1	NST	1	PROTO1
1	1	NST	PROTO2
1	1	1	PROTO3
1	NST	0	EVT1
1	0	NST	EVT2
1	0	0	EVT3
0	NST	NST	DVT1
0	NST	1	DVT2
0	1	NST	DVT3
0	1	1	DVT4
0	0	0	PVT

BOOT CONFIG DESCRIPTION

DSP_AUDIO_IN1, MON1 AND MON2
ARE ONLY ON TP AVAILABLE

DSP_AUDIO_IN1 HWCFG[3]	MON1 HWCFG[2]	MON2 HWCFG[1]	TRIG_IN HWCFG[0]	BOOT CONFIG DESCRIPTION
0	0	0	0	EXTERNAL BOOT VIA USB
0	0	0	1	NOR FLASH - EBU CONFIG: 16-BIT AD MUXED
0	0	1	0	NOR FLASH - EBU CONFIG: 16-BIT AAD MUXED

PAGE TITLE
BASEBAND I/O

Apple Inc.

DRAWING NUMBER 051-7921 SIZE D
REVISION A.0.0
BRANCH
PAGE 2 OF 9
SHEET 22 OF 29

NOTICE OF PROPRIETARY PROPERTY:
THE INFORMATION CONTAINED HEREIN IS THE PROPRIETARY PROPERTY OF APPLE COMPUTER, INC.
THE POSESSOR AGREES TO THE FOLLOWING:
I TO MAINTAIN THIS DOCUMENT IN CONFIDENCE
II NOT TO REPRODUCE OR COPY IT
III NOT TO REVEAL OR PUBLISH IT IN WHOLE OR PART
IV ALL RIGHTS RESERVED

BASEBAND MEMORY

苹果老师维修论坛
http://www.cpu998.com
QQ:499944468

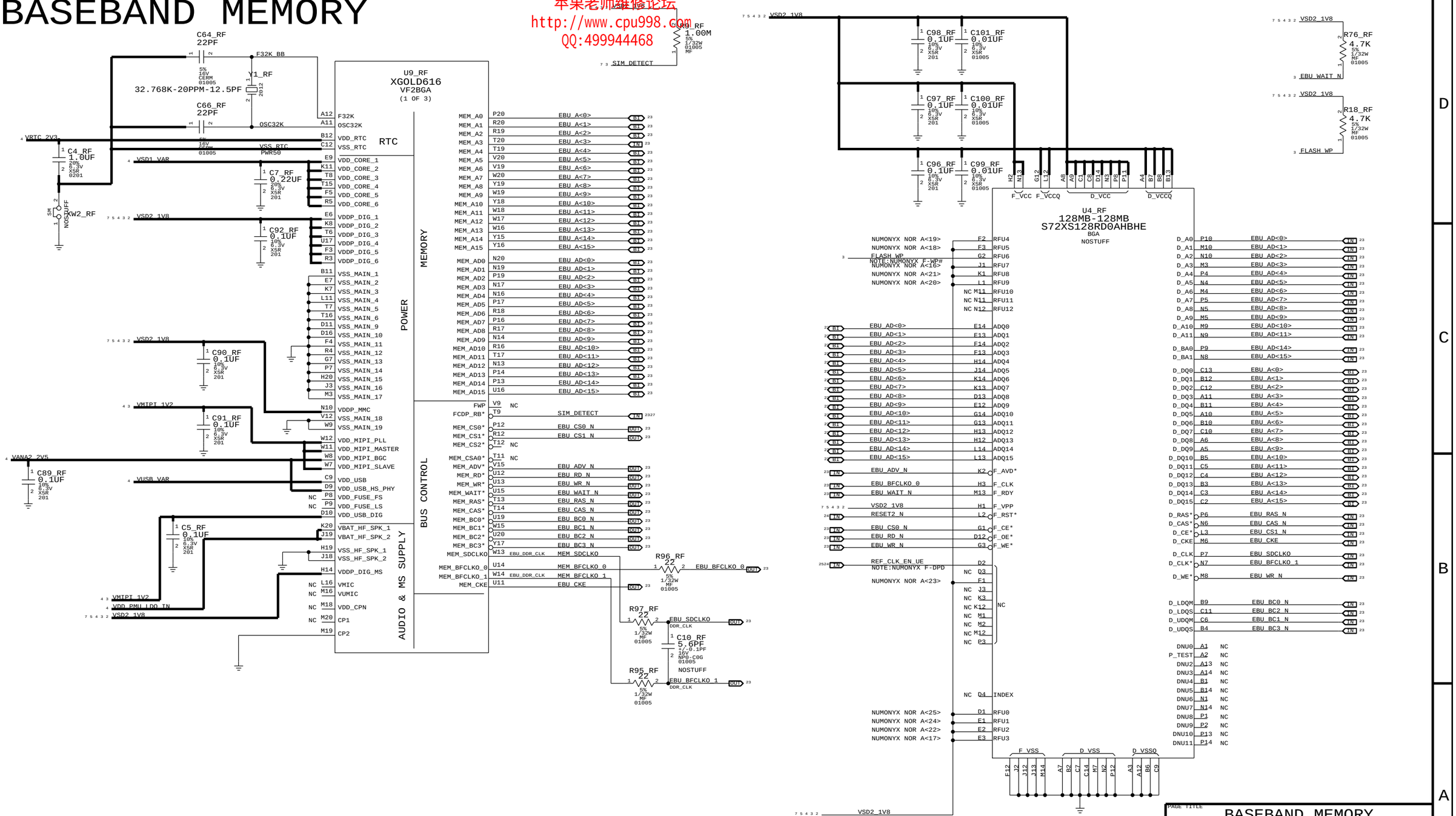

PAGE TITLE	BASEBAND MEMORY
Apple Inc.	DRAWING NUMBER 051-7921 · SIZE D
	REVISION A.0.0
	BRANCH
	PAGE 3 OF 9
	SHEET 23 OF 29

NOTICE OF PROPRIETARY PROPERTY:
THE INFORMATION CONTAINED HEREIN IS THE PROPRIETARY PROPERTY OF APPLE COMPUTER, INC.
THE POSESSOR AGREES TO THE FOLLOWING:
I TO MAINTAIN THIS DOCUMENT IN CONFIDENCE
II NOT TO REPRODUCE OR COPY IT
III NOT TO REVEAL OR PUBLISH IT IN WHOLE OR PART
IV ALL RIGHTS RESERVED

BASEBAND POWER SUPPLY

苹果老师维修论坛
http://www.cpu000.com
QQ:499944464

BATTERY CONNECTOR

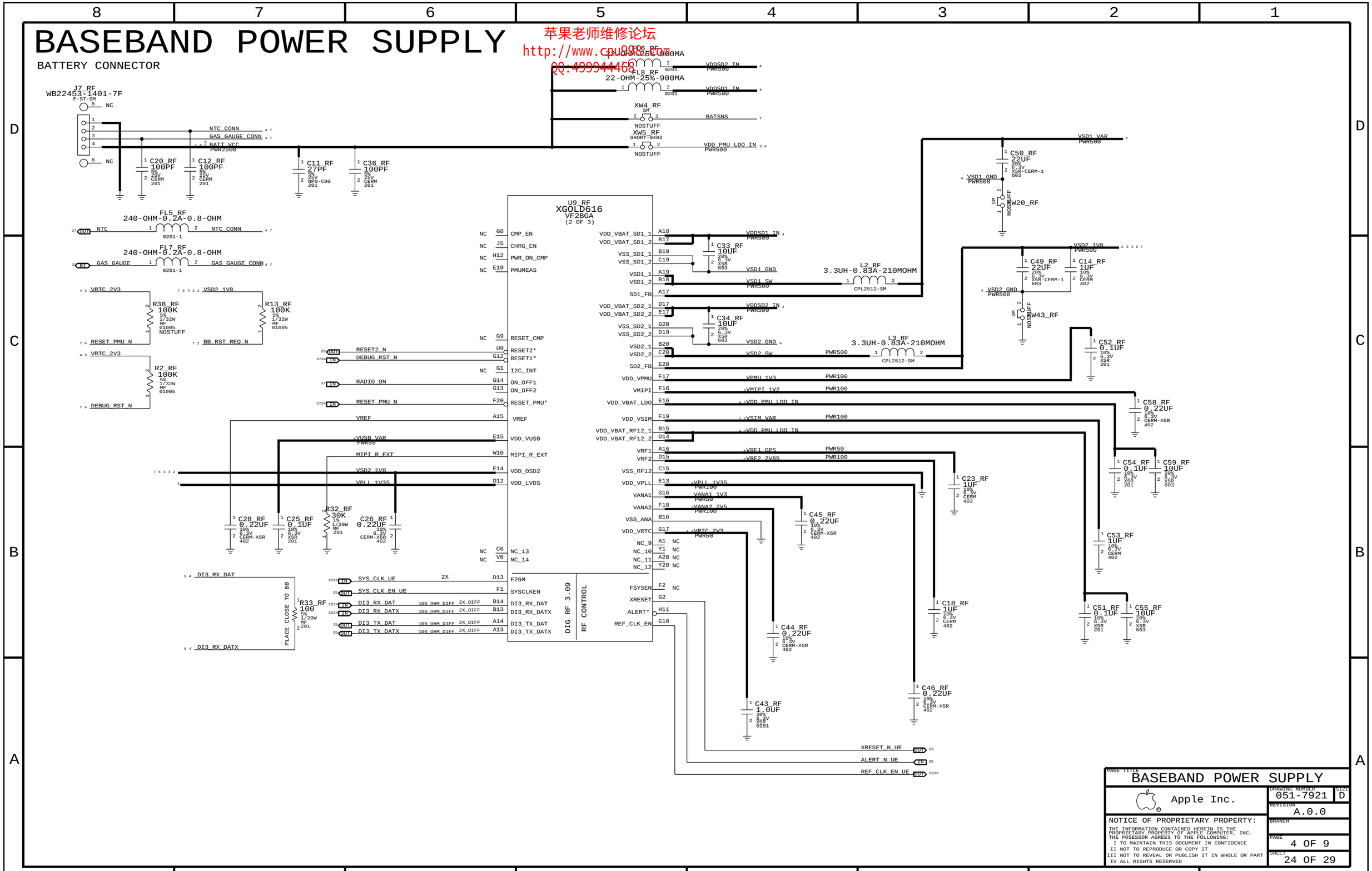

PAGE TITLE	BASEBAND POWER SUPPLY
	Apple Inc.
DRAWING NUMBER	051-7921
SIZE	D
REVISION	A.0.0
BRANCH	
PAGE	4 OF 9
SHEET	24 OF 29

NOTICE OF PROPRIETARY PROPERTY:
THE INFORMATION CONTAINED HEREIN IS THE PROPRIETARY PROPERTY OF APPLE COMPUTER, INC.
THE POSESSOR AGREES TO THE FOLLOWING:
I TO MAINTAIN THIS DOCUMENT IN CONFIDENCE
II NOT TO REPRODUCE OR COPY IT
III NOT TO REVEAL OR PUBLISH IT IN WHOLE OR PART
IV ALL RIGHTS RESERVED

GSM & UMTS TRANSCEIVER - SMARTI UE

苹果老师维修论坛
http://www.cpu998.com
QQ:499944468

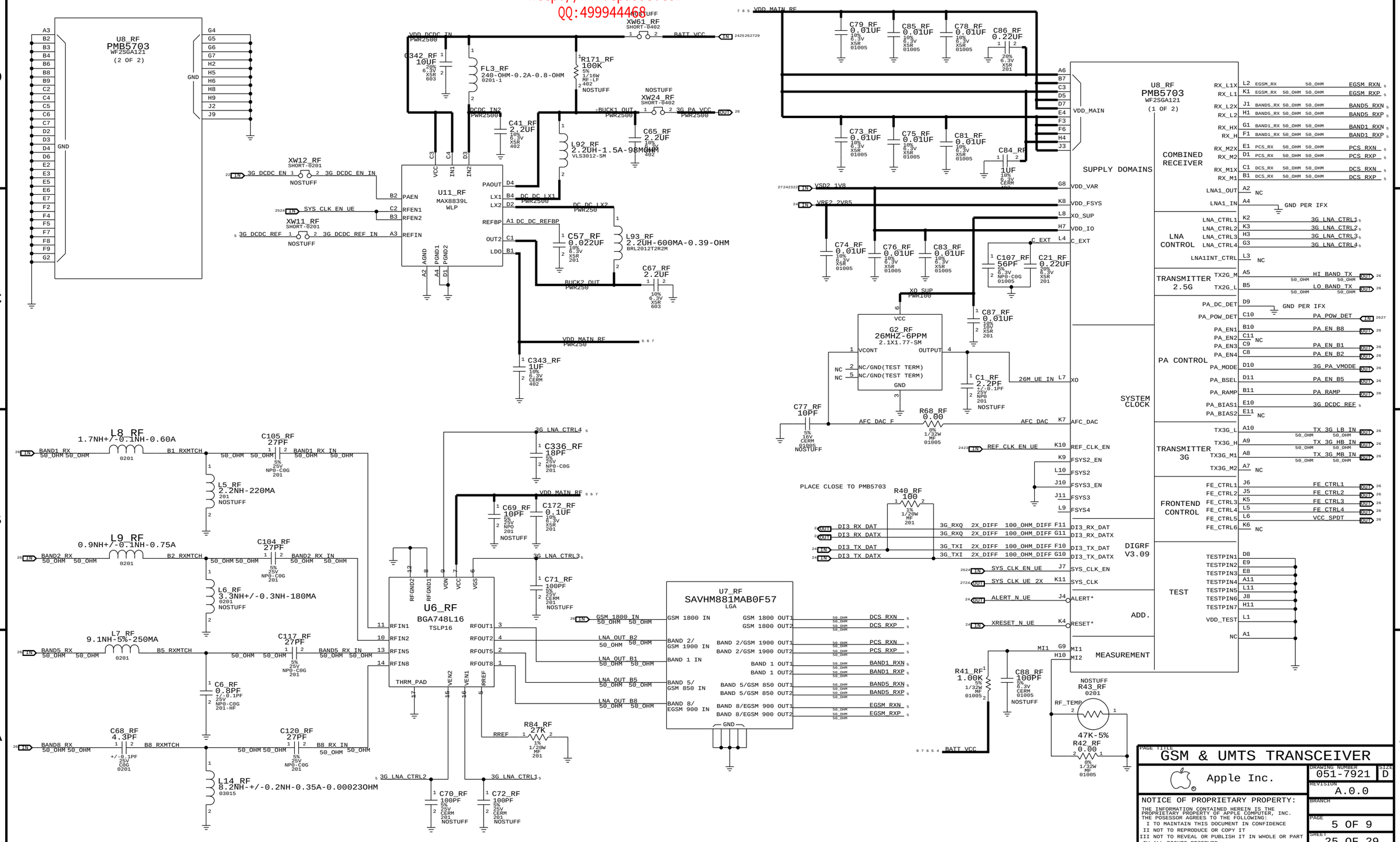

PAGE TITLE: GSM & UMTS TRANSCEIVER

Apple Inc.

DRAWING NUMBER: 051-7921 SIZE: D

REVISION: A.0.0

BRANCH

PAGE: 5 OF 9

SHEET: 25 OF 29

NOTICE OF PROPRIETARY PROPERTY:
THE INFORMATION CONTAINED HEREIN IS THE PROPRIETARY PROPERTY OF APPLE COMPUTER, INC.
THE POSESSOR AGREES TO THE FOLLOWING:
I TO MAINTAIN THIS DOCUMENT IN CONFIDENCE
II NOT TO REPRODUCE OR COPY IT
III NOT TO REVEAL OR PUBLISH IT IN WHOLE OR PART
IV ALL RIGHTS RESERVED

POWER AMPS AND RF FRONT-END MODULE

苹果老师维修论坛
http://www.cpuhelp.com
QQ:499944468

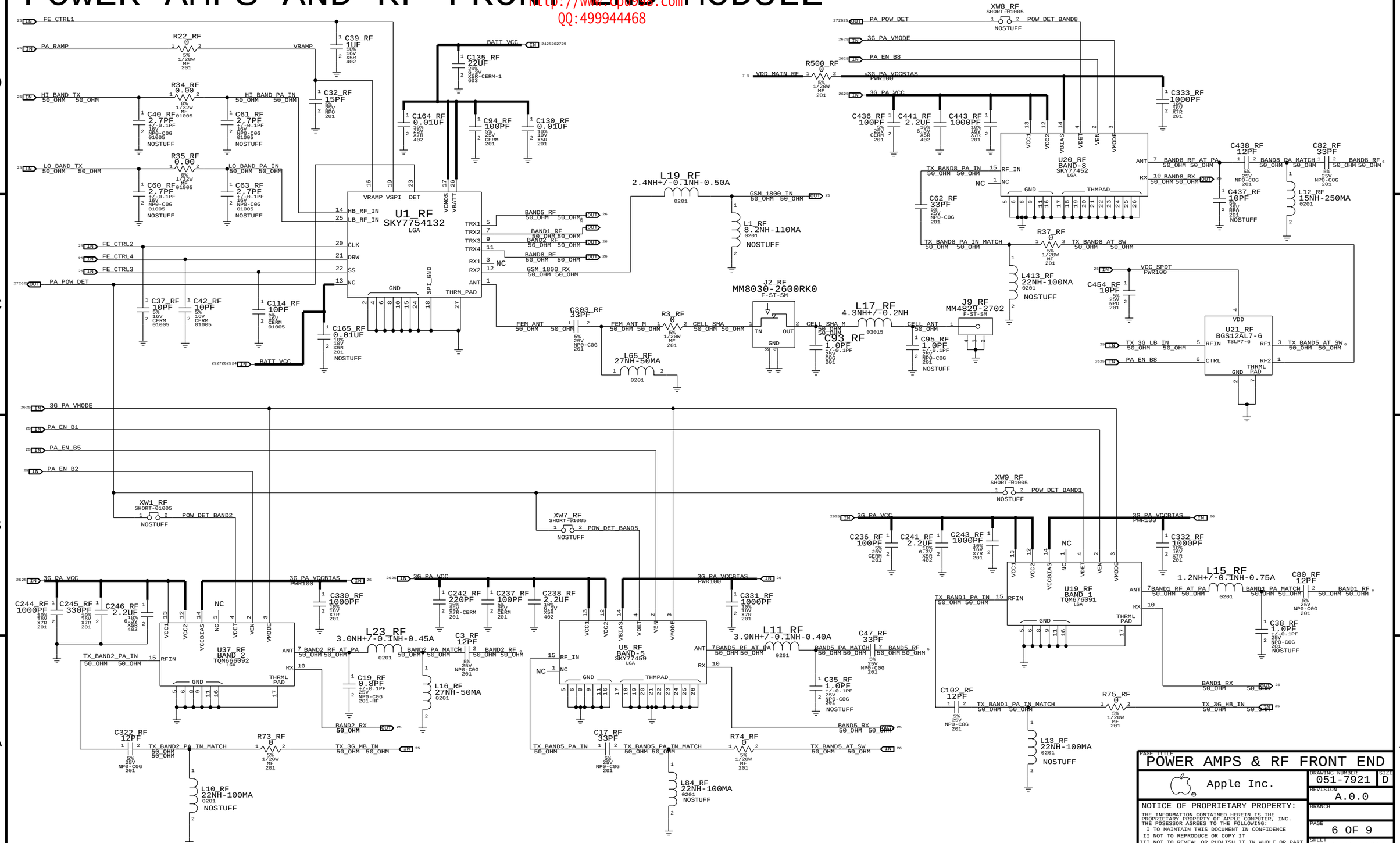

PAGE TITLE
POWER AMPS & RF FRONT END

Apple Inc.

DRAWING NUMBER 051-7921 SIZE D
REVISION A.0.0
BRANCH
PAGE 6 OF 9
SHEET 26 OF 29

NOTICE OF PROPRIETARY PROPERTY:
THE INFORMATION CONTAINED HEREIN IS THE PROPRIETARY PROPERTY OF APPLE COMPUTER, INC.
THE POSESSOR AGREES TO THE FOLLOWING:
I TO MAINTAIN THIS DOCUMENT IN CONFIDENCE
II NOT TO REPRODUCE OR COPY IT
III NOT TO REVEAL OR PUBLISH IT IN WHOLE OR PART
IV ALL RIGHTS RESERVED

苹果老师维修论坛
http://www.cpu998.com
QQ:499944468

SYSTEM CONNECTORS

AP CONNECTIONS

9 7 6 5 4	BATT_VCC	OUT
4	BATSNS	OUT
4	NTC	OUT
4	GAS_GAUGE	IO
7	RF_RESET_N	OUT
7 4	RADIO_ON	IN
7 4	RESET_PMU_N	IN
2	GSM_TXBURST_IND	OUT
7 4 2	BB_RST_REQ_N	IN
2	RESET_DET_N	OUT
2	IPC_MRDY	IN
2	IPC_SRDY	OUT
2	IPC_SCLK	IN
2	IPC_MOSI	IN
2	IPC_MISO	OUT
2	IPC_GPIO	OUT
2	AP_PMU_EXTON	OUT
7 2	BB_USB_VBUS	IN
7 2	BB_USB_DATA_P	IO
7 2	BB_USB_DATA_N	IO
7 2	BB_USART0_TXD	OUT
7 2	BB_USART0_RXD	IN
7 2	BB_USART0_RTS_N	OUT
7 2	BB_USART0_CTS_N	IN
7 2	UMTS_TXD	OUT
7 2	UMTS_RXD	IN
7 2	BB_I2S1_CLK	IN
7 2	BB_I2S1_WA0	IN
7 2	BB_I2S1_TX	OUT
7 2	BB_I2S1_RX	IN
2	BB_I2S2_CLK	IN
2	BB_I2S2_WA0	IN
2	BB_I2S2_TX	OUT
2	BB_I2S2_RX	IN
7 4 2	VSIM_VAR	OUT
7 3	SIM_DETECT	IN
7 2	SIMCRD_RST	OUT
7 2	SIMCRD_CLK	OUT
7 2	SIMCRD_IO	IO
9 8	WL_BT_VDDIO	IN
9 7	WL_BT_REG_ON	IN
9	CLK32K_AP 2X	IN
9 7	WLAN_RESET_N	IN
9 7	WLAN_SDIO_CLK	IO
9 7	WLAN_SDIO_CMD	IO
9 7	WLAN_SDIO_DATA<3..0>	IO
9	HOST_WAKE_WLAN	OUT
9	HOST_WAKE_BT	OUT
9 7	BT_RESET_N	IN
9	BT_WAKE	IN
9 7	BT_UART_TXD	OUT
9 7	BT_UART_RXD	IN
9 7	BT_UART_RTS_N	OUT
9 7	BT_UART_CTS_N	IN
9	BT_PCM_CLK	IO
9	BT_PCM_SYNC	IO
9	BT_PCM_OUT	IO
9	BT_PCM_IN	IO
8 7	GPS_RESET_N_AP	IN
8 7	GPS_STANDBY_N_AP	IN
8 7	GPS_UART_TXD	IO
8 7	GPS_UART_RXD	IO
8 7	GPS_UART_RTS_N	OUT
8 7	GPS_UART_CTS_N	IN
8	GPS_INTR_N	OUT
8	GPS_SYNC	IO

WLAN/BT

PP7_RF	WLAN_TRST_N	9
PP8_RF	WLAN_TCK	9
PP9_RF	WLAN_TMS	9
PP10_RF	WLAN_TDO	9
PP11_RF	WLAN_TDI	9
PP12_RF	WL_BT_REG_ON	7 9
PP13_RF	WLAN_GPS_CLK32K	8 9
PP14_RF	WLAN_CLK_REQ	9
PP15_RF	WLAN_SDIO_CLK	7 9
PP16_RF	WLAN_SDIO_CMD	7 9
PP17_RF	WLAN_SDIO_DATA<3>	7 9
PP18_RF	WLAN_SDIO_DATA<2>	7 9
PP19_RF	WLAN_SDIO_DATA<1>	7 9
PP20_RF	WLAN_SDIO_DATA<0>	7 9
PP23_RF	BT_UART_TXD	7 9
PP24_RF	BT_UART_RXD	7 9
PP25_RF	BT_UART_RTS_N	7 9
PP26_RF	BT_UART_CTS_N	7 9

GPS TRX

PP22_RF	GPS_UART_TXD	7 8
PP5_RF	SYS_CLK_UE	4 5
PP21_RF	GPS_UART_RXD	7 8
PP6_RF	PA_POW_DET	5 6

DIGITAL AUDIO

PP1_RF	BB_I2S1_CLK	2 7
PP2_RF	BB_I2S1_WA0	2 7
PP3_RF	BB_I2S1_TX	2 7
PP4_RF	BB_I2S1_RX	2 7

POWER DOMAINS

TP24_RF	VDD_MAIN_RF	5 6
TP11_RF	BUCK1_OUT	5
TP32_RF		
TP33_RF	BATT_VCC	4 5 6 7 9

SIM

TP65_RF	SIMCRD_IO	2 7
TP56_RF	SIMCRD_RST	2 7
TP59_RF	SIMCRD_CLK	2 7
TP12_RF	VSIM_VAR	2 4 7

DEBUG CONNECTOR

J1_RF AXE680124 M-ST-SM

BATT_VCC 4 5 6 7 9

Pin	Signal	Pin	Signal
10	DEBUG_RST_N (2724 OUT)	9	VSD2_1V8 (2 3 4 5)
12	RESET_PMU_N (2724 OUT)	11	RF_RESET_N (OUT 27)
14	RADIO_ON (2724 OUT)	13	
16		15	BT_RESET_N (OUT 2729)
18	BB_USB_VBUS (2722 OUT)	17	WL_BT_REG_ON (OUT 2729)
20	BB_USB_DATA_P (2722 BI)	19	BT_UART_TXD (IN 2729)
22	BB_USB_DATA_N (2722 BI)	21	BT_UART_RXD (OUT 2729)
24		23	BT_UART_RTS_N (IN 2729)
26	BB_TCK (2722 OUT)	25	BT_UART_CTS_N (OUT 2729)
28	BB_TMS (2722 OUT)	27	
30	BB_TDO (2722 IN)	29 NC	EXT_SDIO_VCC
32	BB_TDI (2722 OUT)	31	WLAN_RESET_N (BI 2729)
34	BB_TRST_N (2722 OUT)	33 NC	WLAN_SDIO_CLK
	BB_RTCK	35 NC	WLAN_SDIO_CMD
36 NC		37 NC	WLAN_SDIO_DATA<3>
38		39 NC	WLAN_SDIO_DATA<2>
40	TRACECLK (22 IN)	41 NC	WLAN_SDIO_DATA<1>
42	TRACECTL (22 IN)	43 NC	WLAN_SDIO_DATA<0>
44	TRACEPKT<7> (22 IN)	45 NC	WLAN_TCK
46	TRACEPKT<6> (22 IN)	47 NC	WLAN_TMS
48	TRACEPKT<5> (22 IN)	49 NC	WLAN_TDO
50	TRACEPKT<4> (22 IN)	51 NC	WLAN_TDI
52	TRACEPKT<3> (22 IN)	53 NC	WLAN_TRST_N
54	TRACEPKT<2> (22 IN)	55	
56	TRACEPKT<1> (22 IN)	57	GPS_RESET_N_AP (OUT 2728)
58	TRACEPKT<0> (22 IN)	59	GPS_STANDBY_N_AP (OUT 2728)
60	TRIG_IN (22 OUT)	61	GPS_UART_TXD (IN 2728)
62		63	GPS_UART_RXD (OUT 2728)
64	BB_USART0_TXD (2722 IN)	65	GPS_UART_RTS_N (IN 2728)
66	BB_USART0_RXD (2722 OUT)	67	GPS_UART_CTS_N (OUT 2728)
68	BB_USART0_RTS_N (2722 IN)	69	
70	BB_USART0_CTS_N (2722 OUT)	71	VSIM_VAR (2 4 7)
72	UMTS_TXD (2722 IN)	73	SIM_DETECT (OUT 2327)
74	UMTS_RXD (2722 OUT)	75	SIMCRD_RST (IN 2227)
76		77	SIMCRD_CLK (IN 2227)
78		79	SIMCRD_IO (BI 2227)
80			
84		83	

NOSTUFF

USART0

TP82_RF	BB_USART0_TXD	2 7
TP89_RF	BB_USART0_RXD	2 7
TP28_RF	BB_USART0_RTS_N	2 7
TP29_RF	BB_USART0_CTS_N	2 7

NTC

TP3_RF	NTC_CONN	4

GAS GAUGE

TP10_RF	GAS_GAUGE_CONN	4

CONTROL

TP74_RF	RADIO_ON	4 7
TP22_RF	BB_RST_REQ_N	2 4 7
TP30_RF	DEBUG_RST_N	4 7
TP7_RF	RESET_PMU_N	4 7

JTAG

TP1_RF	BB_TCK	2 7
TP2_RF	BB_TMS	2 7
TP4_RF	BB_TDO	2 7
TP5_RF	BB_TDI	2 7
TP6_RF	BB_TRST_N	2 7
TP68_RF	MON1	

PAGE TITLE: SYSTEM & DEBUG CONNECTORS

Apple Inc.

DRAWING NUMBER: 051-7921 SIZE: D

REVISION: A.0.0

BRANCH:

PAGE: 7 OF 9

SHEET: 27 OF 29

NOTICE OF PROPRIETARY PROPERTY:
THE INFORMATION CONTAINED HEREIN IS THE PROPRIETARY PROPERTY OF APPLE COMPUTER, INC.
THE POSESSOR AGREES TO THE FOLLOWING:
I TO MAINTAIN THIS DOCUMENT IN CONFIDENCE
II NOT TO REPRODUCE OR COPY IT
III NOT TO REVEAL OR PUBLISH IT IN WHOLE OR PART
IV ALL RIGHTS RESERVED

A-GPS

苹果老师维修论坛
http://www.cpu998.com
QQ:499944468

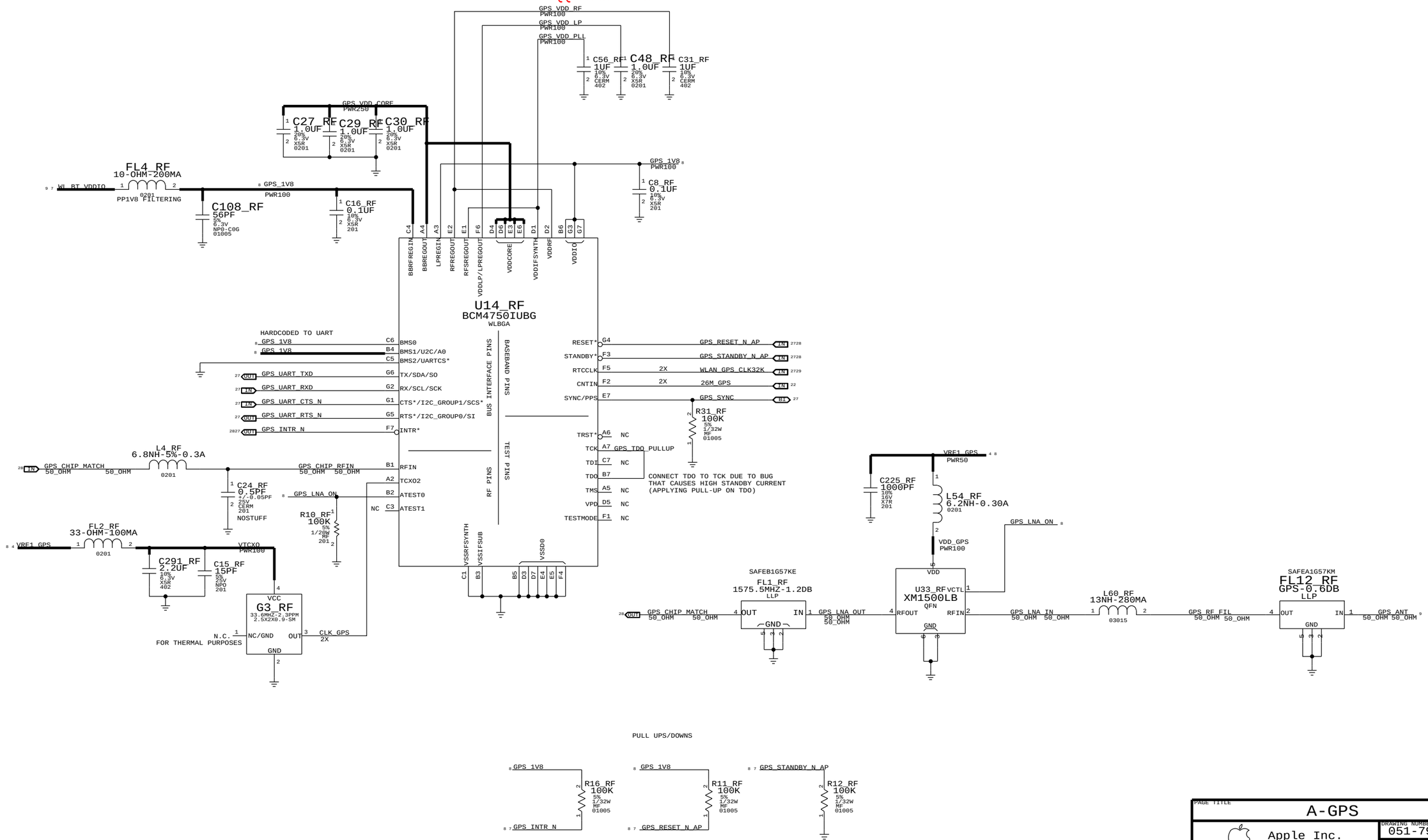

PAGE TITLE	A-GPS
Apple Inc.	DRAWING NUMBER 051-7921 SIZE D
	REVISION A.0.0
	BRANCH
	PAGE 8 OF 9
	SHEET 28 OF 29

NOTICE OF PROPRIETARY PROPERTY:
THE INFORMATION CONTAINED HEREIN IS THE PROPRIETARY PROPERTY OF APPLE COMPUTER, INC.
THE POSESSOR AGREES TO THE FOLLOWING:
I TO MAINTAIN THIS DOCUMENT IN CONFIDENCE
II NOT TO REPRODUCE OR COPY IT
III NOT TO REVEAL OR PUBLISH IT IN WHOLE OR PART
IV ALL RIGHTS RESERVED

WLAN/BLUETOOTH/FM RADIO

苹果老师维修论坛
http://www.cpu998.com
QQ:499944468

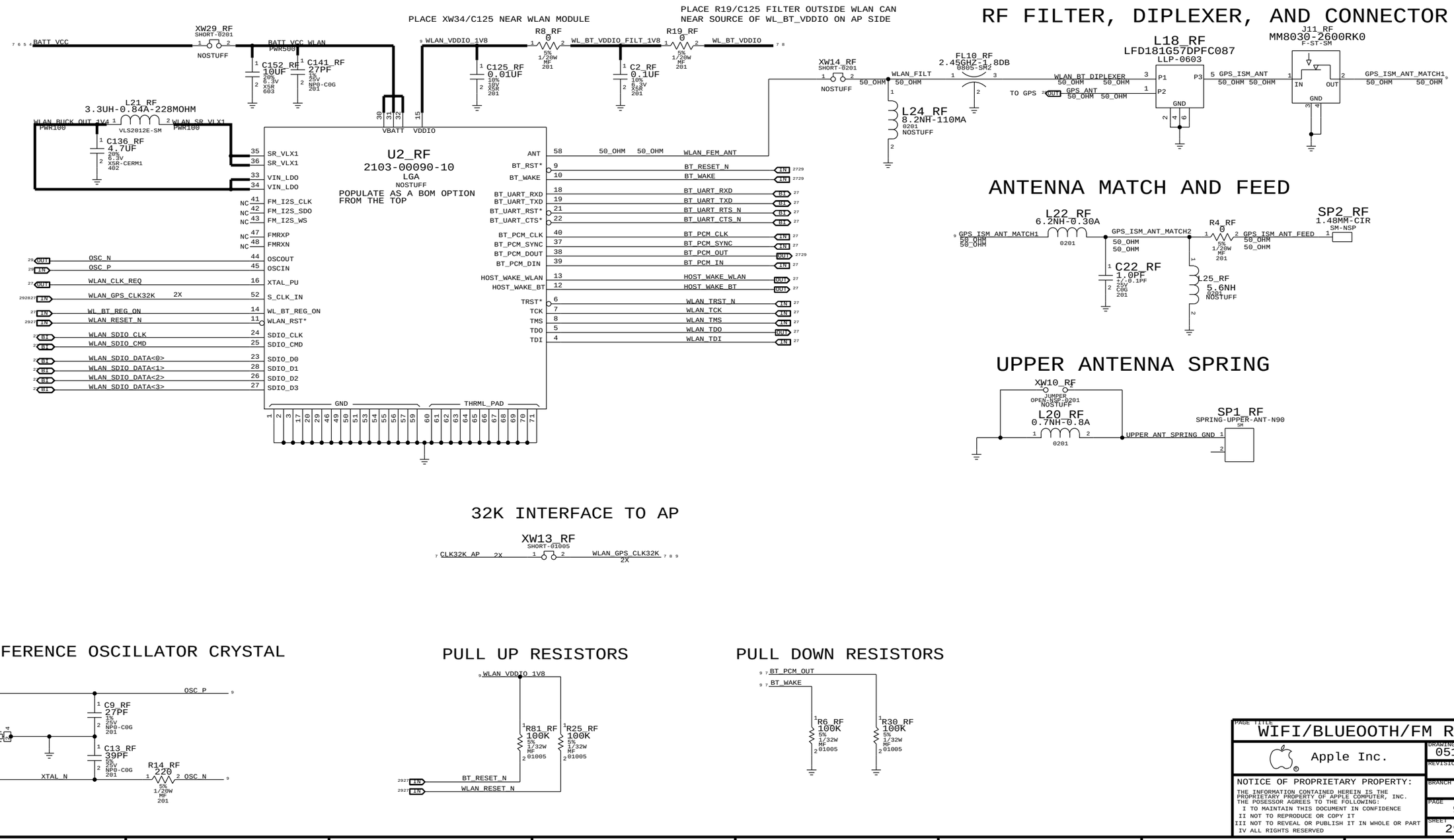

PAGE TITLE	WIFI/BLUEOOTH/FM RADIO
Apple Inc.	DRAWING NUMBER 051-7921 SIZE D
	REVISION A.0.0
	BRANCH
	PAGE 9 OF 9
	SHEET 29 OF 29

NOTICE OF PROPRIETARY PROPERTY:
THE INFORMATION CONTAINED HEREIN IS THE PROPRIETARY PROPERTY OF APPLE COMPUTER, INC.
THE POSESSOR AGREES TO THE FOLLOWING:
I TO MAINTAIN THIS DOCUMENT IN CONFIDENCE
II NOT TO REPRODUCE OR COPY IT
III NOT TO REVEAL OR PUBLISH IT IN WHOLE OR PART
IV ALL RIGHTS RESERVED