1. ALL RESISTANCE VALUES ARE IN OHMS, 0.1 WATT +/- 5%.
2. ALL CAPACITANCE VALUES ARE IN MICROFARADS.
3. ALL CRYSTALS & OSCILLATOR VALUES ARE IN HERTZ.

Mon Feb 18 18:52:09 2013

REV	ECN	DESCRIPTION OF REVISION	CK APPD	DATE
8	0001837617	ENGINEERING RELEASED		2013-02-18

X145 SINGLE_BRD E1C

PDF PAGE	CSA PAGE	CONTENTS	SYNC MASTER	DATE
2	2	H6P JTAG,USB,PLL,HSIC,XTAL	N/A	N/A
3	3	H6P DIGITAL I/O,BOOTSTRAPPING	N/A	N/A
4	4	H6P VDDCA,VDD1/2,VDD,VDD_CPU,VDD_GPU	N/A	N/A
5	5	H6P GND,VDDIO18,VDDIOD,VDD_SRAM,VDD_SOC	N/A	N/A
6	6	H6P NAND,NAND 12X17	N/A	N/A
7	7	H6P HIGH SPEED DIG (CAM,LCM,DP)	N/A	N/A
8	8	BUTTON FLEX B2B	N/A	N/A
9	9	L67 AUDIO CODEC (1/2)	N/A	N/A
10	10	L67 AUDIO CODEC (2/2)	N/A	N/A
11	11	FRONT CAM FLEX B2B	N/A	N/A
12	12	AMBER PMU(1/2)	N/A	N/A
13	13	AMBER PMU(2/2)	N/A	N/A
14	14	CHESTNUT,BACKLIGHT DRIVER,MESA BOOST	N/A	N/A
15	15	SPKR AMP + STROBE DRIVER	N/A	N/A
16	16	TRISTAR,EEPROM	N/A	N/A
17	17	DOCKFLEX B2B	N/A	N/A
18	18	D403 (TOUCH B2B, DRIVER ICS)	N/A	N/A
19	19	LCM B2B	N/A	N/A
20	20	OSCAR + SENSORS	N/A	N/A
21	21	REAR CAM B2B	N/A	N/A
22	22	BATT B2B, TPS, PD FEATURES	N/A	N/A
23	23	VOLTAGE NETS		
24	24	RADIO_MLB HIERARCH. SYMBOL	N/A	N/A
25	25	Cross Reference Page		

INDUCTOR BOM OPTIONS

UPDATED FOR EVT2 RDAR://12984453

	PART#	QTY	DESCRIPTION	REFERENCE DESIGNATOR(S)	CRITICAL	BOM OPTION
BUCK0 SLAVE	152S1834	3	BUCK0 SLAVE IND: 0.47UH, CYNTEC	L10,L12,L14	CRITICAL	IND_BUCK0_SLV_P47UH_CYNTEC
	152S1839	3	BUCK0 SLAVE IND: 0.47UH, TAIYO	L10,L12,L14	CRITICAL	IND_BUCK0_SLV_P47UH_TAIYO
BUCKXX MASTER	152S1801	7	AMBER BUCKXX IND: 1UH CYNTEC	L9,L11,L13,L15,L16,L17,L18	CRITICAL	IND_BUCKXX_1UH_CYNTEC
	152S1840	7	AMBER BUCKXX IND: 1UH TAIYO	L9,L11,L13,L15,L16,L17,L18	CRITICAL	IND_BUCKXX_1UH_TAIYO
STROBE	152S1801	1	STROBE IND: 1UH CYNTEC	L5	CRITICAL	IND_STROBE_1UH_CYNTEC
	152S1840	1	STROBE IND: 1UH TAIYO	L5	CRITICAL	IND_STROBE_1UH_TAIYO
SPKR AMP	152S1836	1	SPKR AMP IND: 1.2UH CYNTEC	L4	CRITICAL	IND_SPKRAMP_1P2UH_CYNTEC
	152S1844	1	SPKR AMP IND: 1.2UH TAIYO	L4	CRITICAL	IND_SPKAMP_1P2UH_TAIYO
CHARGER	152S1721	1	CHARGER IND: 2.2UH TAIYO	L8	CRITICAL	IND_CHGR_2P2UH_TAIYO
	152S1850	1	CHARGER IND: 2.2UH MURATA	L8	CRITICAL	IND_CHGR_2P2UH_MURATA
CHESTNUT	152S1842	1	TI CHESTNUT: 1.5UH TAIYO	L19	CRITICAL	IND_CHESTNUT_1P5UH_TAIYO
	152S1802	1	TI CHESTNUT: 1.5UH CYNTEC	L19	CRITICAL	IND_CHESTNUT_1P5UH_CYNTEC
	152S1849	1	TI CHESTNUT: 1.5UH MURATA	L19	CRITICAL	IND_CHESTNUT_1P5UH_MURATA

AUDIO BOM OPTION

PART#	QTY	DESCRIPTION	REFERENCE DESIGNATOR(S)	CRITICAL	BOM OPTION
155S0556	2	FERRITE 0402 P140HM 1A	FL6, FL9	CRITICAL	SPKAMP_FERRITE_REG
155S0731	2	FERRITE 0402 P70OHM 1P8A	FL6, FL9	CRITICAL	SPKAMP_FERRITE_LOWDCR
132S0396	2	CAP 0402 10V 1000PF	C500, C501	CRITICAL	SPKAMP_CAPFILT_1000PF
132S0437	2	CAP 0402 10V 150PF	C500, C501	CRITICAL	SPKAMP_CAPFILT_150PF
131S0283	2	CAP 0402 10V 100PF	DZ13, DZ14	CRITICAL	SPKAMP_ESDFILT_100PF
337S0106	2	VARISTOR 12V 33PF	DZ13, DZ14	CRITICAL	SPKAMP_ESDFILT_VARS
155S0453	2	120OHM FERRITE BEAD	FL1,FL10	CRITICAL	HS3_HS4_120OHM_BEADS
155S0755	2	240OHM FERRITE BEAD	FL1,FL10	CRITICAL	HS3_HS4_240OHM_BEADS

NAVAJO SPI BOM OPTIONS

PART#	QTY	DESCRIPTION	REFERENCE DESIGNATOR(S)	CRITICAL	BOM OPTION
117S0161	4	0OHMS SERIES R ON NAVAJO SPI	FL32,FL63,FL50,FL59	CRITICAL	NAVAJO_SERIES_0OHM
155S0453	4	120OHM FERRITES ON NAVAJO SPI	FL32,FL63,FL50,FL59	CRITICAL	NAVAJO_SERIES_FERRITE

OSCAR BOM OPTIONS

PART#	QTY	DESCRIPTION	REFERENCE DESIGNATOR(S)	CRITICAL	BOM OPTION
337S4416	1	OSCAR A1 CSP	U9	CRITICAL	OSCAR_CSP
337S4417	1	OSCAR A1 FCLGA	U9	CRITICAL	OSCAR_FCLGA

MISC BOM OPTIONS

PART#	QTY	DESCRIPTION	REFERENCE DESIGNATOR(S)	CRITICAL	BOM OPTION
118S0723	2	DDR_RREF 240OHM	R73,R72	CRITICAL	DDR_RREF_240
118S0684	2	DDR_RREF 243OHM	R73,R72	CRITICAL	DDR_RREF_243

X145 BOM CALLOUTS

PART#	QTY	DESCRIPTION	REFERENCE DESIGNATOR(S)	CRITICAL	BOM OPTION
051-9478	1	SCH, SINGLE_BRD, X145	SCH	CRITICAL	?
820-3292	1	PCB, SINGLE_BRD, X145	PCB	CRITICAL	?
825-6838	1	LABEL FOR X145 639-4152	EEEE_F7GR	CRITICAL	EEEE_MM_16G
825-6838	1	LABEL FOR X145 639-4153	EEEE_F7GQ	CRITICAL	EEEE_MM_32G
825-6838	1	LABEL FOR X145 639-3465	EEEE_DYJP	CRITICAL	EEEE_MM_64G
825-6838	1	LABEL FOR X145 639-4668	EEEE_FGCC	CRITICAL	EEEE_SM_16G
825-6838	1	LABEL FOR X145 639-4667	EEEE_FGCD	CRITICAL	EEEE_SM_32G
825-6838	1	LABEL FOR X145 639-4669	EEEE_FGCF	CRITICAL	EEEE_SM_64G

SOC BOM OPTIONS

PART#	QTY	DESCRIPTION	REFERENCE DESIGNATOR(S)	CRITICAL	BOM OPTION
339S0207	1	H6P + 1GB ELPIDA	U1	CRITICAL	

SOC BOM ALTERNATES

PART NUMBER	ALTERNATE FOR PART NUMBER	BOM OPTION	REF DES	COMMENTS:
339S0208	339S0207		U1	H6P + 1GB HYNIX

NAND BOM OPTIONS

PART#	QTY	DESCRIPTION	REFERENCE DESIGNATOR(S)	CRITICAL	BOM OPTION
335S0930	1	NAND,19NM,16GX8,MLC,PPN1.5,HYNIX	U4	CRITICAL	NAND_16G
335S0931	1	NAND,19NM,32GX8,MLC,PPN1.5,HYNIX	U4	CRITICAL	NAND_32G
335S0932	1	NAND,19NM,64GX8,MLC,PPN1.5,HYNIX	U4	CRITICAL	NAND_64G

NAND BOM ALTERNATES

PART NUMBER	ALTERNATE FOR PART NUMBER	BOM OPTION	REF DES	COMMENTS:
335S0921	335S0930		U4	NAND_16GB_TOSHIBA
335S0933	335S0930		U4	NAND_16GB_SANDISK
335S0922	335S0931		U4	NAND_32GB_TOSHIBA
335S0934	335S0931		U4	NAND_32GB_SANDISK
335S0923	335S0932		U4	NAND_64GB_TOSHIBA
335S0935	335S0932		U4	NAND_64GB_SANDISK

RADIO_MLB ALTERNATES

PART NUMBER	ALTERNATE FOR PART NUMBER	BOM OPTION	REF DES	COMMENTS:
335S0895	335S0874		U6_RF	WINBOND NOR ALT
339S0204	339S0205		U8_RF	USI WIFI ALT
339S0209	339S0205		U8_RF	TDK WIFI ALT
197S0491	197S0470		Y1_RF	KYOCERA ALT
197S0482	197S0470		Y1_RF	EPSON ALT

FOXCONN DELL

SCH 051-9478
BRD 820-3292
MCO 056-5179
BOM 639-4152 (16GB) X145
BOM 639-4153 (32GB) X145
BOM 639-3465 (64GB) X145

FOR CHESTNUT BOMTABLE - SEE PG 14
FOR RADIO BOMTABLE - SEE PG 24
FOR MISC R/L/C - SEE PG 2

I2C ADDRESS MAP

I2C0

DEVICE	BINARY	7-BIT HEX	8-BIT HEX
AMBER PMU:	1110100X	0X74	0XE8
CS35L19B AMP:	1000000X	0X40	0X80
LM3534 BL DRIVER:	1100011X	0X63	0XC6
TRISTAR:	0011010X	0X1A	0X34
CHESTNUT:	0100111X	0X27	0X4E

I2C1

CT814 ALS:	0101001X	0X29	0X52

RCAM I2C

OPEL STROBE DRIVER:	1100011X	0X63	0XC6
REAR FACING CAM:	0010000X	0X10	0X20
ADI VCM AF DRIVER:	0001110X	0X0E	0X1C
ROHM VCM AF DRIVER:	0001100X	0X0C	0X18

FCAM I2C

FRONT FACING CAM:	0110110X	0X36	0X6C

NOTE: ACCEL, GYRO, COMPASS ALL USING SPI (VIA OSCAR) FOR AP COMMUNICATION.

DRAWING TITLE: SCH,SINGLE_BRD,X145

Apple Inc.

DRAWING NUMBER: 051-9478 SIZE: D
REVISION: 8.0.0
BRANCH:
PAGE: 1 OF 25
SHEET: 1 OF 56

NOTICE OF PROPRIETARY PROPERTY:
THE INFORMATION CONTAINED HEREIN IS THE PROPRIETARY PROPERTY OF APPLE INC.
THE POSESSOR AGREES TO THE FOLLOWING:
I TO MAINTAIN THIS DOCUMENT IN CONFIDENCE
II NOT TO REPRODUCE OR COPY IT
III NOT TO REVEAL OR PUBLISH IT IN WHOLE OR PART
IV ALL RIGHTS RESERVED

H6P: JTAG, USB, PLL, HSIC, XTAL

MISC COMPONENTS ALTERNATES

PART NUMBER	ALTERNATE FOR PART NUMBER	BOM OPTION	REF DES	COMMENTS:
107S0146	107S0208			ALT FOR THERMISTOR
138S0702	138S0657			?
138S0697	138S0695			?
138S0746	138S0705			?
138S0739	138S0706			?
155S0773	155S0453			?
155S0667	155S0583			?
335S0895	335S0874			?
138S0703	138S0648			?
118S0764	118S0717			ALT FOR TCAL (R109)

RDAR://13212472

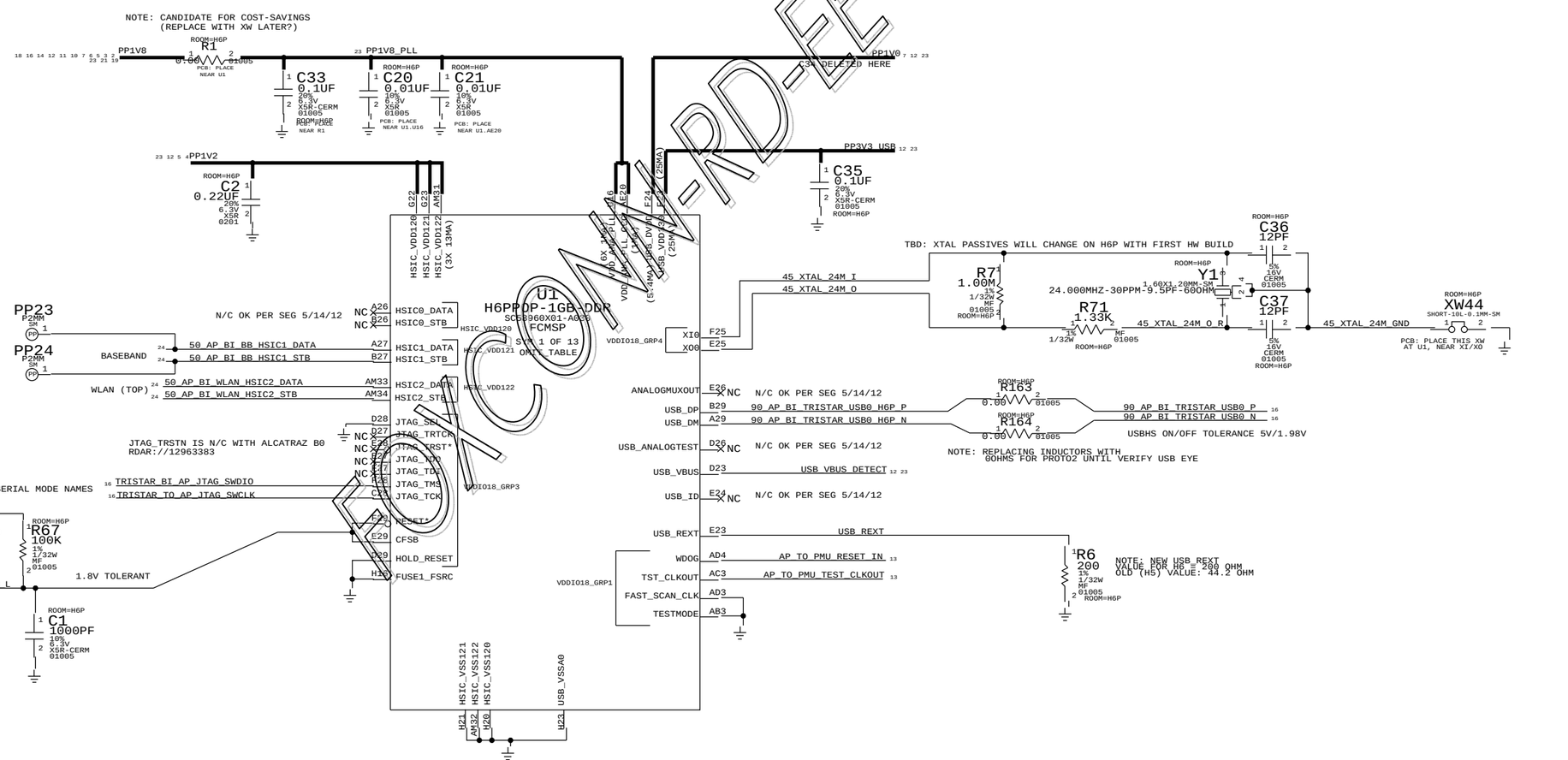

SYNC_MASTER=N/A SYNC_DATE=N/A

PAGE TITLE: H6P JTAG,USB,PLL,HSIC,XTAL

Apple Inc.

DRAWING NUMBER: 051-9478 SIZE: D

REVISION: 8.0.0

BRANCH:

PAGE: 2 OF 25

SHEET: 2 OF 56

NOTICE OF PROPRIETARY PROPERTY:
THE INFORMATION CONTAINED HEREIN IS THE PROPRIETARY PROPERTY OF APPLE INC.
THE POSESSOR AGREES TO THE FOLLOWING:
I TO MAINTAIN THIS DOCUMENT IN CONFIDENCE
II NOT TO REPRODUCE OR COPY IT
III NOT TO REVEAL OR PUBLISH IT IN WHOLE OR PART
IV ALL RIGHTS RESERVED

H6P: DIGITAL I/O, BOOTSTRAPPING

NOTE: THIS PULLUP + NET FOR NAVAJO DAISY-CHAIN (PROTO1A/PROTO2) TO BE DELETED FROM DESIGN WHEN NAVAJO SILICON ARRIVES.

PULLDOWN NEEDED ON FORCE_DFU FOR A0 ROM. CAN BE REMOVED WHEN GET B0 SILICON
RDAR://12963383

FORCE_DFU — R162 100K 5% 1/32W MF 01005 — NOSTUFF

BOOTSTRAPPING (BOARD_REV, BOARD_ID, BOOT_CFG)

BOARD_REV[3:0]={GPIO34, GPIO35, GPIO36, GPIO37}
FLOAT=LOW, PULLUP=HIGH

1111	PROTO2/2A, TRISAR/L19
1110	EVT1 MAIN BUILD
1101	EVT1 MESA BUILD
1100	EVT1A MESA BUILD
1011	E1B MAIN BUILD
1010	E1C MAIN BUILD <--- SELECTED (NOSTUFF R3000 & STUFF R3001)

BOARD_ID[3:0]={GPIO16, SPIO0_MISO, SPI0_MOSI, SPI0_SCLK}
FLOAT=LOW, PULLUP=HIGH

0000	X145 MLB <--- SELECTED
0001	X145 DEV
0010	X152 MLB
0011	X152 DEV

BOOT_CONFIG[3:0]={GPIO29_CONFIG3,GPIO28_CONFIG2,GPIO25_CONFIG1,GPIO18_CONFIG0}
FLOAT=LOW, PULLUP=HIGH

0000	SPI0
0001	SPI0 TEST MODE
0010	NAND
0011	NAND TEST MODE <--- SELECTED

COMMON PULL UP FOR BOARD_REV, BOARD_ID AND BOOT_CONFIG PINS

PP1V8 — R12 1.00K 5% 1/32W MF 01005 — BOARD_INFO

R12 MUST WIN OVER 6X INTERNAL PULL-DOWNS THAT ARE ~100K

BOARD_INFO — R3000 0.00 0% 1/32W MF 01005 — NOSTUFF — BOARD_INFO_R

BOARD_INFO — R3001 0.00 0% 1/32W MF 01005 — BOARD_INFO_M

MENU & POWER / HOLD KEY BUFFER

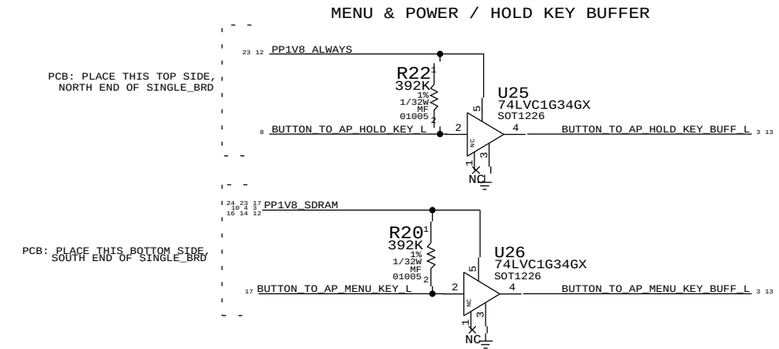

SYNC MASTER=N/A	SYNC DATE=N/A
PAGE TITLE	H6P DIGITAL I/O,BOOTSTRAPPING
Apple Inc.	DRAWING NUMBER 051-9478 SIZE D
	REVISION 8.0.0
NOTICE OF PROPRIETARY PROPERTY: THE INFORMATION CONTAINED HEREIN IS THE PROPRIETARY PROPERTY OF APPLE INC. THE POSESSOR AGREES TO THE FOLLOWING: I TO MAINTAIN THIS DOCUMENT IN CONFIDENCE II NOT TO REPRODUCE OR COPY IT III NOT TO REVEAL OR PUBLISH IT IN WHOLE OR PART IV ALL RIGHTS RESERVED	BRANCH
	PAGE 3 OF 25
	SHEET 3 OF 56

FOXCONN

H6P: GND, VDDCA, VDD1/2, VDD, VDD_CPU, VDD_GPU

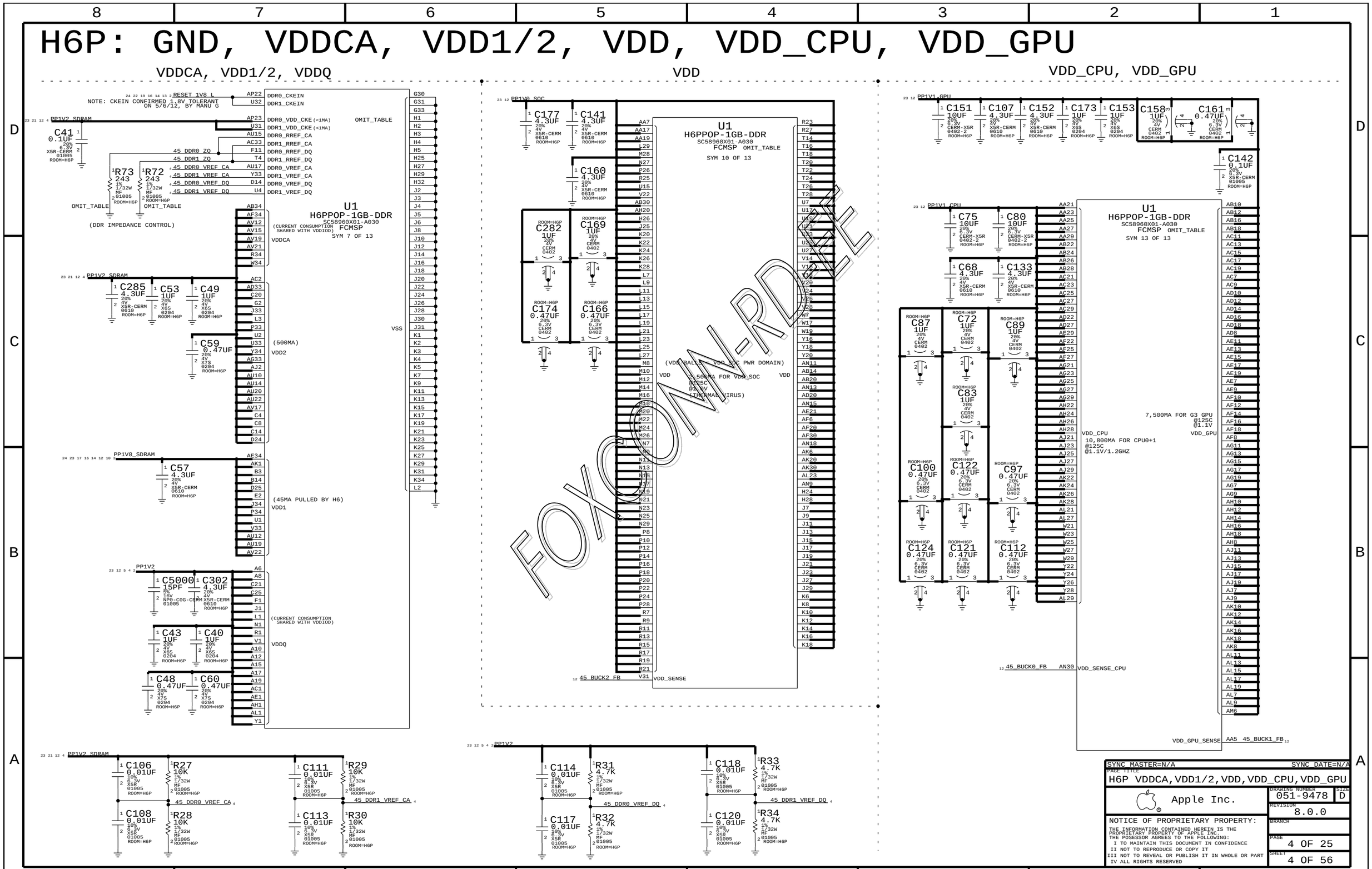

H6P (GND, VDDIO18, VDDIOD, VDD_SRAM, VDD_SOC)

JUST A FEW GNDS

U1
H6PPOP-1GB-DDR
SC58960X01-A030
FCMSP
SYM 12 OF 13
OMIT_TABLE

AN32, AN33, AN34, AP6, AP20, AP21, AP24, AP25, AP26, AP27, AP28, AP29, AP30, AP31, AP32, AR3, AR8, AR12, AR15, AR17, AR20, AR21, AR22, AR23, AR24, AR25, AR28, AR29, AR32, AT1, AT4, AT6, AT20, AT21, AT22, AT23, AT24, AT25, AT26, AT27, AT28, AT29, AT30, AT31, AT32, AU1, AU2, AU11, AU16, AU18, AU21, AU33, AU34, AV1, AV2, AV9, AV11, AV14, AV16, AV18, AV20, AV33, AV34, B1, B2, B4, B5, B6, B7, B8, B9, B10, B11, B12, B13, B15, B16, B17, B18, B19, B25, B28, B30, B33, B34, C1, C2, C3, C5, C6, C7, C9 — VSS

C10, C11, C12, C13, C15, C16, C17, C18, C19, C22, C23, C24, C26, C27, C29, C31, D1, D2, D3, D4, D5, D6, D7, D8, D9, D10, D11, D12, D13, D15, D16, D17, D18, D19, D20, D21, D22, D32, E1, E3, E4, E5, E6, E7, E8, E9, E10, E11, E12, E13, E14, E15, E18, E19, E20, E21, E22, E31, E32, E34, F2, F3, F4, F5, F6, F7, F8, F9, F10, F12, F13, F14, F15, F26, F30, F31, G1, G3, G4, G5, G6, G7, G8, G9, G10, G11, G12, G13, G14, G15, G26, G28 — VSS

U1
H6PPOP-1GB-DDR
SC58960X01-A030
FCMSP
SYM 11 OF 13
OMIT_TABLE

A1, A2, A3, A4, A5, A7, A9, A11, A13, A14, A16, A18, A25, A28, A30, A33, A34, AA1, AA2, AA3, AA4, AA8, AA10, AA12, AA14, AA16, AA18, AA22, AA24, AA26, AA28, AA30, AB5, AB7, AB9, AB11, AB13, AB15, AB17, AB19, AB21, AB23, AB25, AB27, AB29, AB32, AC4, AC8, AC10, AC12, AC14, AC16, AC18, AC20, AC22, AC24, AC26, AC28, AC30, AC34, AD2, AD7, AD9, AD11, AD13, AD15, AD17, AD19, AD21, AD23, AD25, AD29, AD32, AE3, AE8, AE10, AE12, AE14, AE16, AE18, AE22, AE24, AE26, AE28, AF5, AF7, AF9, AF11, AF13, AF15, AF17, AF19 — VSS

AF21, AF23, AF29, AF32, AG2, AG8, AG10, AG12, AG14, AG16, AG18, AG20, AG22, AG24, AG26, AG28, AG30, AH5, AH7, AH9, AH11, AH13, AH15, AH17, AH19, AH21, AH23, AH25, AH27, AH29, AH32, AJ1, AJ3, AJ8, AJ10, AJ12, AJ14, AJ16, AJ18, AJ22, AJ24, AJ26, AJ28, AJ30, AK5, AK7, AK9, AK11, AK13, AK15, AK17, AK19, AK21, AK23, AK27, AK29, AK32, AL3, AL6, AL8, AL10, AL12, AL14, AL16, AL18, AL20, AL22, AL24, AL26, AL28, AL30, AM4, AM7, AM18, AM30, AN2, AN5, AN7, AB6, AM9, AM11, AM13, AN16, AN15, AN19, AN20, AN21, AN22, AN23, AN24, AN31 — VSS

VDDIOD, VDDIO18

23 12 4 2 PP1V2

CAPS FOR VDDIOD ARE SHARED WITH VDDQ

AM20, AM21, AM22, AM23, AM24 — VDDIOD_DDR0CA

R29, T29, U29, V29 — VDDIOD_DDR1CA

OMIT_TABLE
U1
H6PPOP-1GB-DDR
SC58960X01-A030
FCMSP
SYM 9 OF 13

AA6, H6, H7, H8, H9, H10, H11, H12, H13, H14, H15, M6, N6, P6, R6, T6, U6, V6, W6, Y6 — VDDIOD_DDR0Q (1000MA)

R33, T1, T2, T3, T5, T7, T9, T11, T13, T15, T17, T19, T21, T23, T25, T27, T30, T31, T32, T33, T34, U3, U5, U8, U10, U12, U14, U18, U20, U22, U24, U26, U28, U30, U34, V2, V3, V4, V5, V7, V9, V11, V13, V15, V17, V19, V21, V23, V25, V27, V30, V32, V34, W1, W2, W3, W4, W5, W8, W10, W12, W14, W16, W18, W20, W22, W24, W26, W28, W33, Y2, Y3, Y4, Y5, Y7, Y9, Y11, Y13, Y15, Y17, Y19, Y21, Y23, Y27, Y29, Y32, AM17, Y30, AC6, AE6, AG6, AJ6, AE30 — VSS

CAPS FOR VDDIO18 ARE SHARED WITH VDDIODX

14 12 11 10 7 6 5 3 2 23 21 19 18 16 PP1V8

C30 4.7UF 20% 4V X5R 402 ROOM=H6P

C78 1UF 20% 4V X6S 0204 ROOM=H6P

C86 1UF 20% 4V X6S 0204 ROOM=H6P

C95 0.47UF 20% 4V X7S 0204 ROOM=H6P

AD6, AH6, AM8, AM10, AM12, AM14, AM16, AM19 — VDDIO18_GRP1 (65MA) (GPIO,UART,SPI,I2C) (SENSOR,SOCHOT,PMU)

AD30, AH30 — VDDIO18_GRP2 (20MA) (I2S,TMR,SIO,GPIO,UART)

G25, G27, H30, K30, M30, P30, G29 — VDDIO18_GRP3 (31MA) (PPN,GPIO,JTAG)

G24 — VDDIO18_GRP4 (2MA) (XTAL I/O)

ROOM=H6P
FL67
1KOHM-25%-0.2A
0201

23 PP1V8_XTAL

C379 1.0UF 20% 16V X5R-CERM 0201-1 ROOM=H6P

VDD_SRAM, VDD_SOC

U1
H6PPOP-1GB-DDR
SC58960X01-A030
FCMSP
SYM 8 OF 13
OMIT_TABLE

L4, L5, L6, L8, L10, L12, L14, L16, L18, L20, L22, L24, L26, L28, L30, L33, M1, M2, M3, M4, M5, M7, M9, M11, M13, M15, M17, M19, M21, M23, M25, M27, M29, M31, N2, N3, N4, N5, N8, N10, N12, N14, N16, N18, N20, N22, N24, N26, N28, N30, N33, P1, P2, P3, P4, P5, P7, P9, P11, P13, P15, P17, P19, P21, P23, P25, P27, P29, R2, R3, R4, R5, R8, R10, R12, R14, R16, R18, R20, R22, R24, R26, R28, R30, R31 — VSS

23 12 PP1V0_SRAM

C305 4.3UF 20% 4V X5R-CERM 0610 ROOM=H6P

C81 1UF 20% 4V X6S 0204 ROOM=H6P

C115 1UF 20% 4V X6S 0204 ROOM=H6P

C91 0.47UF 20% 4V X7S 0204 ROOM=H6P

C134 0.47UF 20% 4V X7S 0204 ROOM=H6P

AD24, AD26, AD28, AE23, AE25, AE27, AE24, AF26, AF28, AK25, Y25 — VDD_SRAM_CPU 1,500MA FOR CYCLONE + M$ SRAM @125C @1.0V

AA9, AA11, AA13, AA15, AB8, T8, T10, T12, U9, U11, U13, V8, V10, V12, W9, W11, W13, W15, Y8, Y10, Y12, Y14 — VDD_SRAM_SOC (1500MA)

16 14 12 11 10 7 6 5 3 2 23 21 18 14 PP1V8

C85 0.1UF 20% 16V X5R-CERM 01005 ROOM=H6P

AJ20 VDD_ANA_TMPSADC0(2.5MA)
AA20 VDD_ANA_TMPSADC1(2.5MA)
AB4 VDD_ANA_TMPSADC2(2.5MA)
H22 VDD_ANA_TMPSADC3(2.5MA)

FOXCONN-RD-EE

SYNC_MASTER=N/A SYNC_DATE=N/A

PAGE TITLE
H6P GND,VDDIO18,VDDIOD,VDD_SRAM,VDD_SOC

Apple Inc.

DRAWING NUMBER 051-9478 SIZE D
REVISION 8.0.0
BRANCH
PAGE 5 OF 25
SHEET 5 OF 56

NOTICE OF PROPRIETARY PROPERTY:
THE INFORMATION CONTAINED HEREIN IS THE PROPRIETARY PROPERTY OF APPLE INC.
THE POSESSOR AGREES TO THE FOLLOWING:
I TO MAINTAIN THIS DOCUMENT IN CONFIDENCE
II NOT TO REPRODUCE OR COPY IT
III NOT TO REVEAL OR PUBLISH IT IN WHOLE OR PART
IV ALL RIGHTS RESERVED

H6P NAND + 12X17 NAND PKG

SUPPORT FOR PPN1.5 (1.8V IO) ONLY

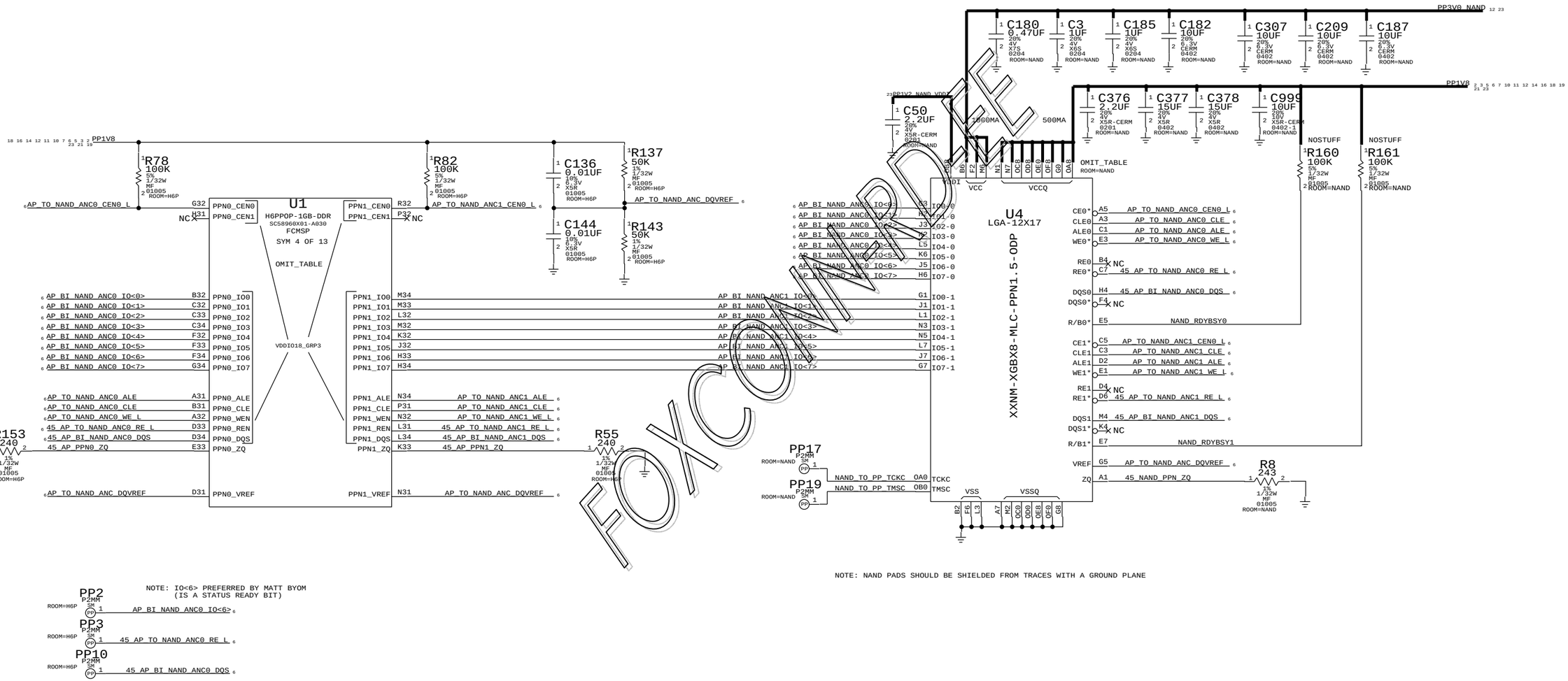

FOXCONN PENDING

SYNC MASTER=N/A SYNC DATE=N/A

PAGE TITLE: H6P NAND,NAND 12X17

Apple Inc.

DRAWING NUMBER: 051-9478 SIZE: D

REVISION: 8.0.0

BRANCH

PAGE: 6 OF 25

SHEET: 6 OF 56

NOTICE OF PROPRIETARY PROPERTY:
THE INFORMATION CONTAINED HEREIN IS THE PROPRIETARY PROPERTY OF APPLE INC.
THE POSESSOR AGREES TO THE FOLLOWING:
I TO MAINTAIN THIS DOCUMENT IN CONFIDENCE
II NOT TO REPRODUCE OR COPY IT
III NOT TO REVEAL OR PUBLISH IT IN WHOLE OR PART
IV ALL RIGHTS RESERVED

H6P HIGH SPEED DIG (CAM, LCD, DP)

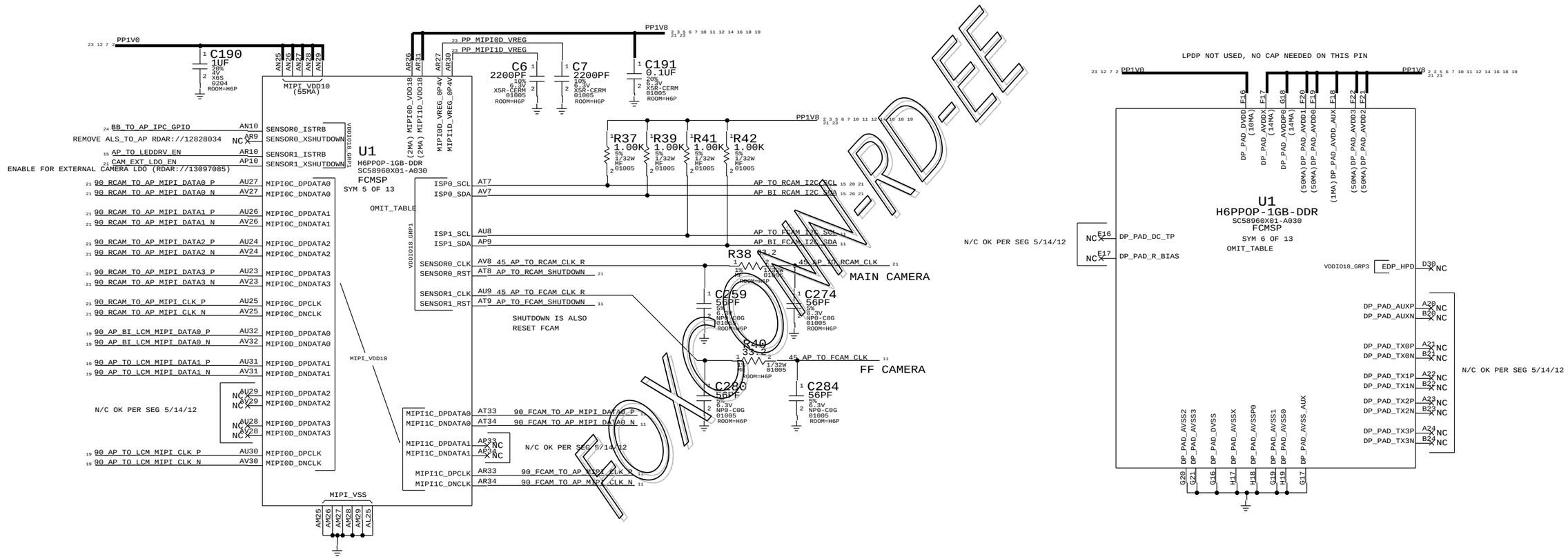

FOXCONN-RD-EE

SYNC_MASTER=N/A SYNC_DATE=N/A

PAGE TITLE
H6:HI-SPEED DIG

Apple Inc.

DRAWING NUMBER 051-9478 SIZE D

REVISION 8.0.0

BRANCH

PAGE 7 OF 25

SHEET 7 OF 56

NOTICE OF PROPRIETARY PROPERTY:
THE INFORMATION CONTAINED HEREIN IS THE PROPRIETARY PROPERTY OF APPLE INC.
THE POSESSOR AGREES TO THE FOLLOWING:
I TO MAINTAIN THIS DOCUMENT IN CONFIDENCE
II NOT TO REPRODUCE OR COPY IT
III NOT TO REVEAL OR PUBLISH IT IN WHOLE OR PART
IV ALL RIGHTS RESERVED

BUTTON FLEX (VIBE DRIVER, BUTTONS, ANC REF MIC, STROBE, STROBE_NTC)

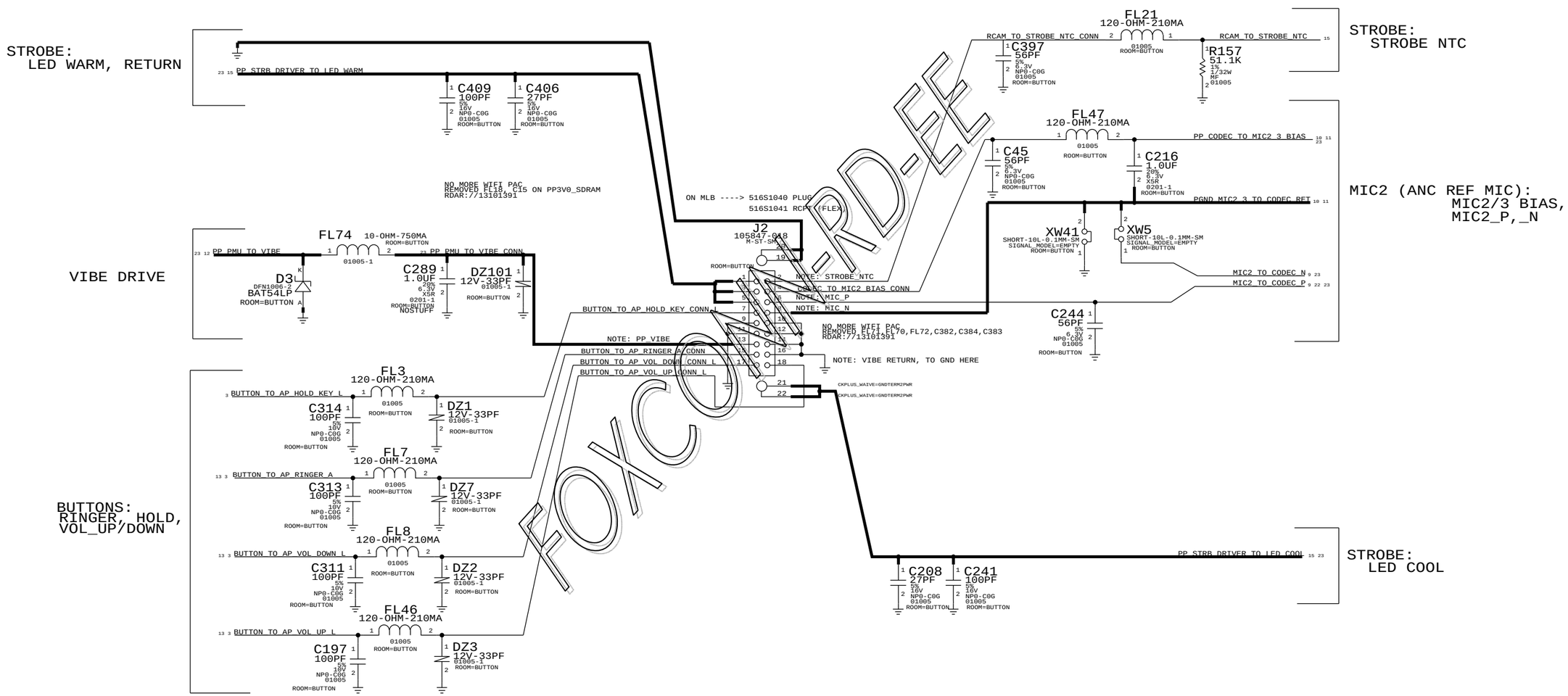

Foxconn-RD-EE

SYNC_MASTER=N/A SYNC_DATE=N/A

PAGE TITLE: BUTTON FLEX B2B

Apple Inc.

DRAWING NUMBER: 051-9478 SIZE: D

REVISION: 8.0.0

BRANCH:

PAGE: 8 OF 25

SHEET: 8 OF 56

NOTICE OF PROPRIETARY PROPERTY:
THE INFORMATION CONTAINED HEREIN IS THE PROPRIETARY PROPERTY OF APPLE INC.
THE POSESSOR AGREES TO THE FOLLOWING:
I TO MAINTAIN THIS DOCUMENT IN CONFIDENCE
II NOT TO REPRODUCE OR COPY IT
III NOT TO REVEAL OR PUBLISH IT IN WHOLE OR PART
IV ALL RIGHTS RESERVED

L67 AUDIO CODEC

AUDIO I/O

(ANALOG MIC IN, DIG MIC IN, HPOUT, LINEOUT, RECEIVER OUT, MIKEYBUS)

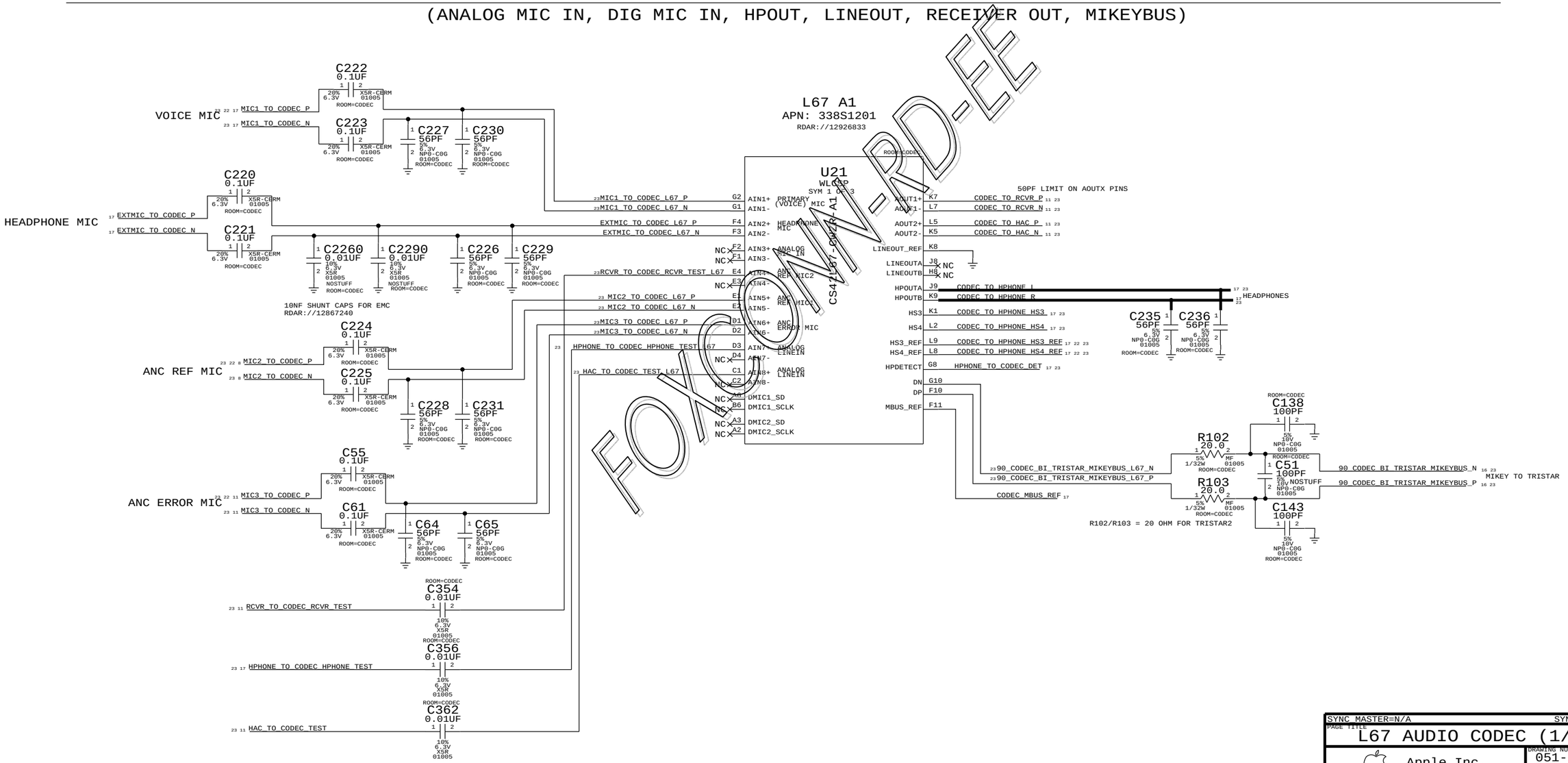

FOXCONN-PD-EE

SYNC_MASTER=N/A SYNC_DATE=N/A

PAGE TITLE: L67 AUDIO CODEC (1/2)

Apple Inc.

DRAWING NUMBER: 051-9478 SIZE: D

REVISION: 8.0.0

BRANCH

PAGE: 9 OF 25

SHEET: 9 OF 56

NOTICE OF PROPRIETARY PROPERTY:
THE INFORMATION CONTAINED HEREIN IS THE PROPRIETARY PROPERTY OF APPLE INC.
THE POSESSOR AGREES TO THE FOLLOWING:
I TO MAINTAIN THIS DOCUMENT IN CONFIDENCE
II NOT TO REPRODUCE OR COPY IT
III NOT TO REVEAL OR PUBLISH IT IN WHOLE OR PART
IV ALL RIGHTS RESERVED

L67 AUDIO CODEC

POWER, MICBIAS

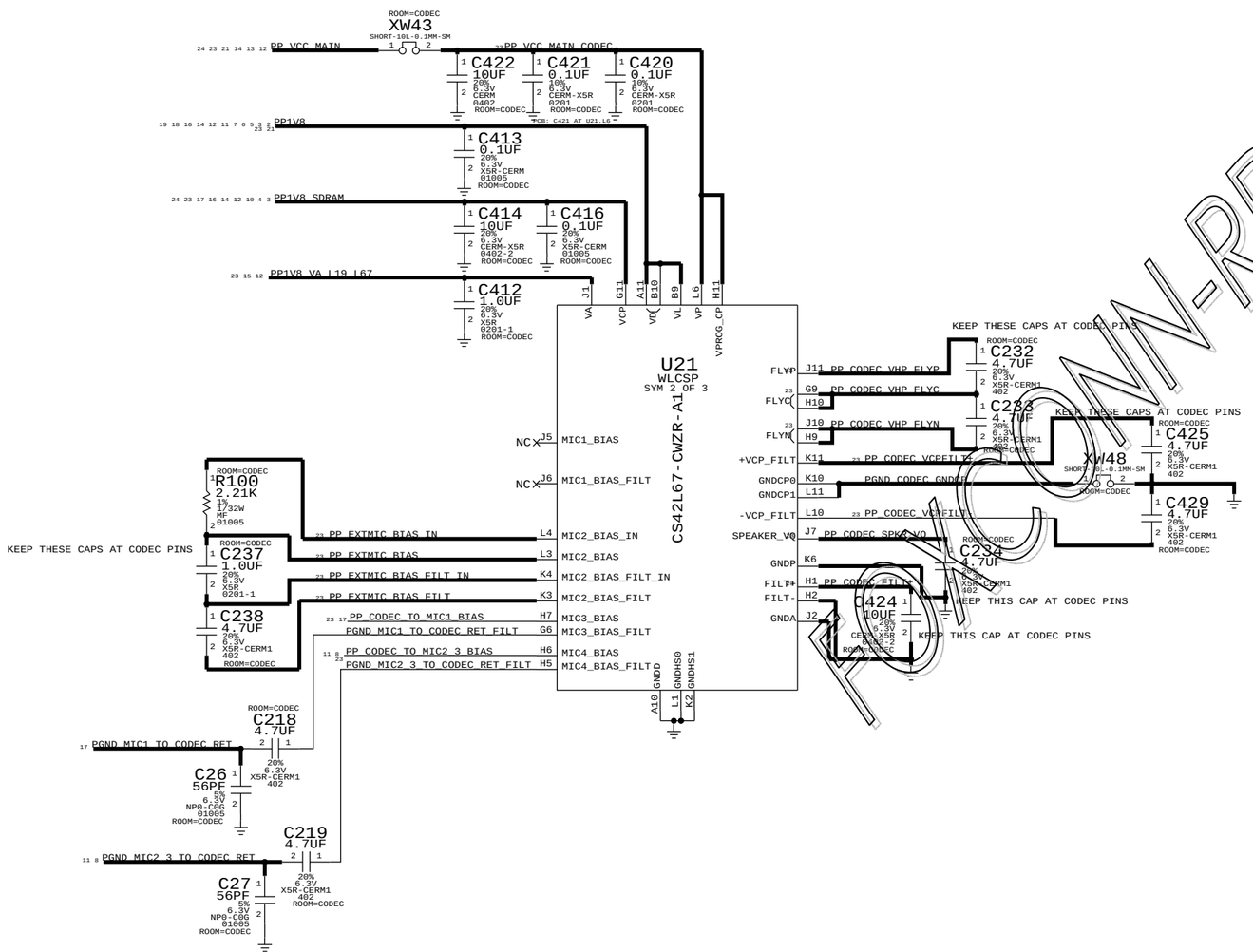

DIGITAL SYSTEM I/O

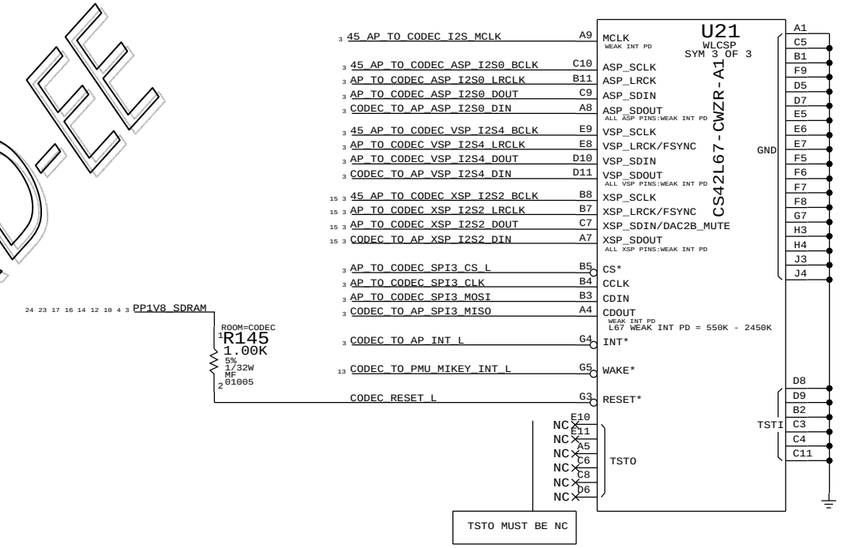

DOWN-RD-EE

SYNC MASTER=N/A SYNC DATE=N/A

PAGE TITLE
L67 AUDIO CODEC (2/2)

Apple Inc.

DRAWING NUMBER 051-9478 SIZE D

REVISION 8.0.0

BRANCH

PAGE 10 OF 25

SHEET 10 OF 56

NOTICE OF PROPRIETARY PROPERTY:
THE INFORMATION CONTAINED HEREIN IS THE PROPRIETARY PROPERTY OF APPLE INC.
THE POSESSOR AGREES TO THE FOLLOWING:
I TO MAINTAIN THIS DOCUMENT IN CONFIDENCE
II NOT TO REPRODUCE OR COPY IT
III NOT TO REVEAL OR PUBLISH IT IN WHOLE OR PART
IV ALL RIGHTS RESERVED

FRONT CAM FLEX B2B (FCAM, PROX, ALS, RECEIVER, ANC ERROR MIC)

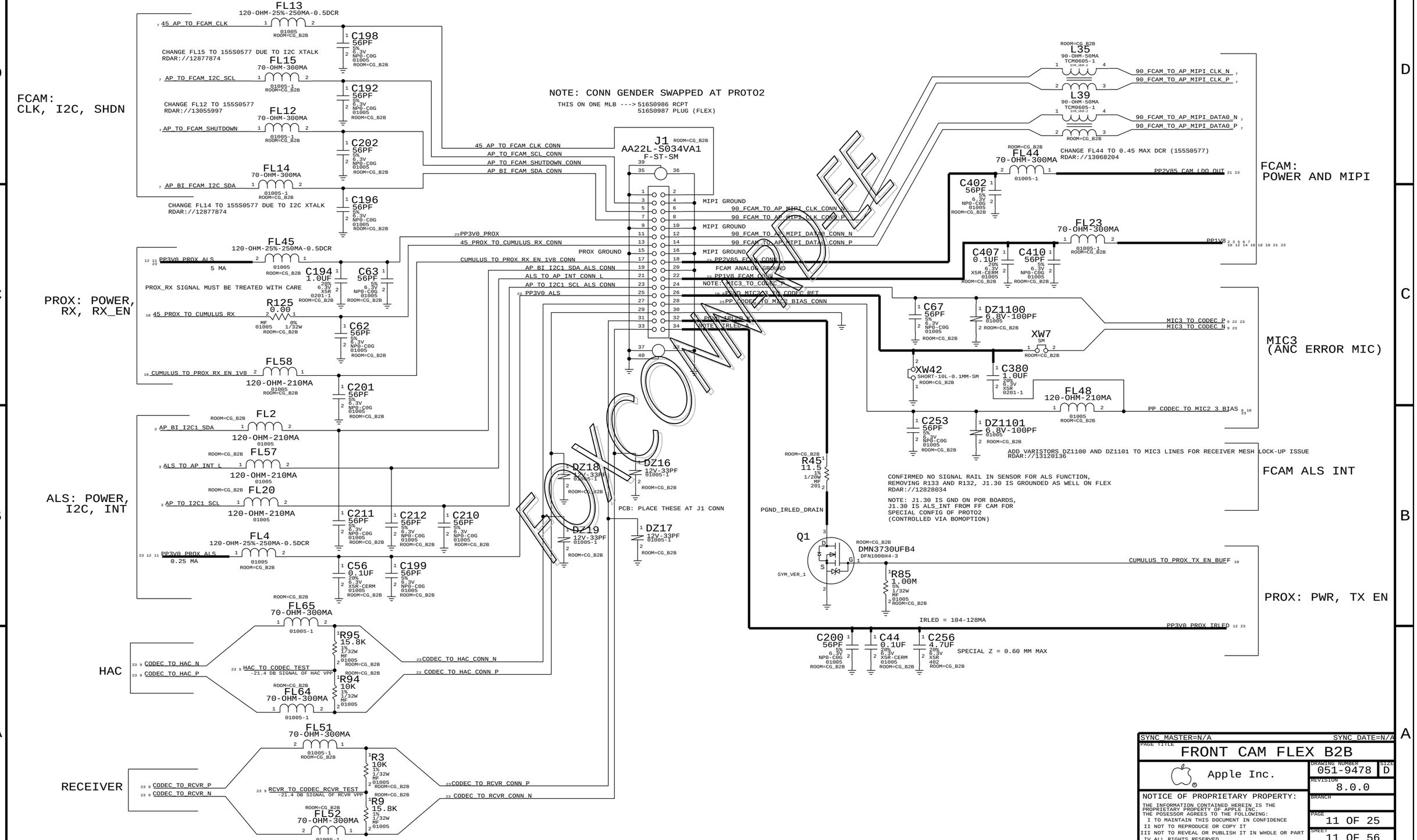

SYNC_MASTER=N/A SYNC DATE=N/A

PAGE TITLE: FRONT CAM FLEX B2B

Apple Inc.

DRAWING NUMBER: 051-9478 SIZE: D

REVISION: 8.0.0

BRANCH

PAGE: 11 OF 25

SHEET: 11 OF 56

NOTICE OF PROPRIETARY PROPERTY:
THE INFORMATION CONTAINED HEREIN IS THE PROPRIETARY PROPERTY OF APPLE INC.
THE POSESSOR AGREES TO THE FOLLOWING:
I TO MAINTAIN THIS DOCUMENT IN CONFIDENCE
II NOT TO REPRODUCE OR COPY IT
III NOT TO REVEAL OR PUBLISH IT IN WHOLE OR PART
IV ALL RIGHTS RESERVED

AMBER PMU
(BUCK, LDO, VIBE DRIVER, 32K, CHARGER)

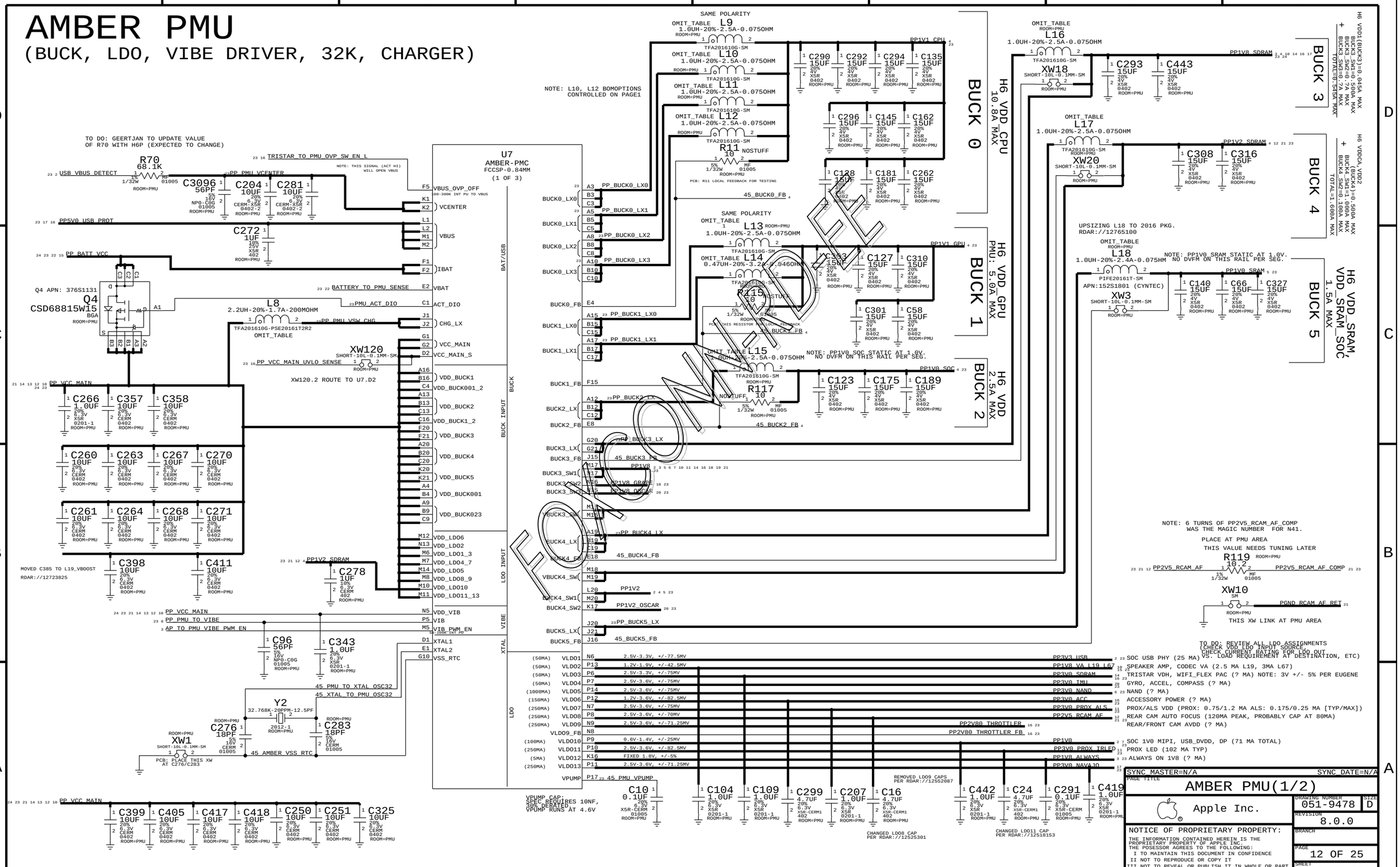

AMBER PMU

(AMUX, GPIO, BUTTONS, ADC, THERMISTORS, SYSTEM I/F, GND)

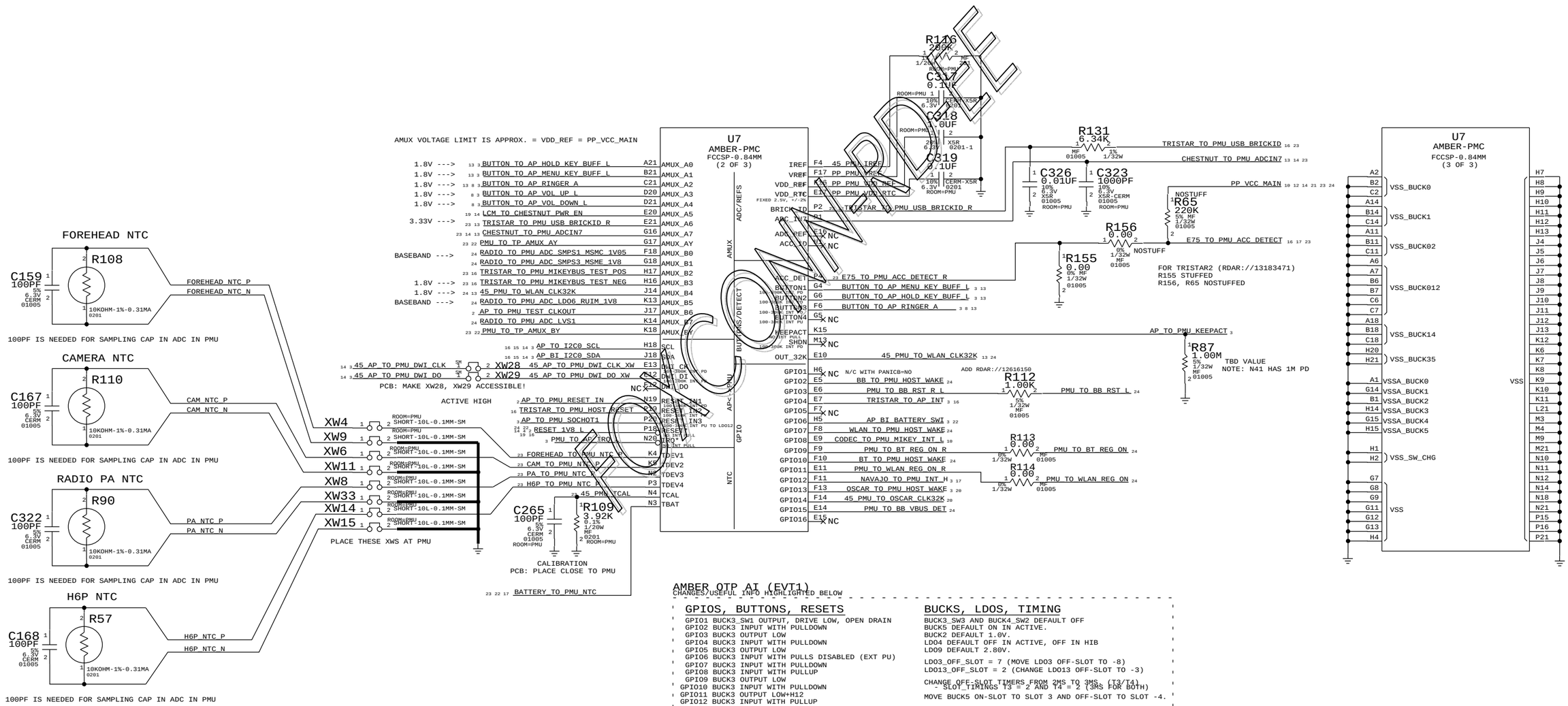

AMBER OTP AI (EVT1)

CHANGES/USEFUL INFO HIGHLIGHTED BELOW

GPIOS, BUTTONS, RESETS

GPIO1 BUCK3_SW1 OUTPUT, DRIVE LOW, OPEN DRAIN
GPIO2 BUCK3 INPUT WITH PULLDOWN
GPIO3 BUCK3 OUTPUT LOW
GPIO4 BUCK3 INPUT WITH PULLDOWN
GPIO5 BUCK3 OUTPUT LOW
GPIO6 BUCK3 INPUT WITH PULLS DISABLED (EXT PU)
GPIO7 BUCK3 INPUT WITH PULLDOWN
GPIO8 BUCK3 INPUT WITH PULLUP
GPIO9 BUCK3 OUTPUT LOW
GPIO10 BUCK3 INPUT WITH PULLDOWN
GPIO11 BUCK3 OUTPUT LOW+H12
GPIO12 BUCK3 INPUT WITH PULLUP
GPIO13 BUCK3 INPUT WILL PULLDOWN
GPIO14 BUCK3 OUTPUT LOW
GPIO15 VDD_MAIN OUTPUT LOW
GPIO16 BUCK3_SW1 INPUT WITH PULLDOWN

BUTTON2 WAKE FROM HIB AND STBY.
BUTTON4 PULLUP TO BUCK3

RESET_IN1 ENABLED
RESET_IN3 ENABLED, ACTIVE LOW, PU ENABLED TO LDO12
NOTE: HIB STATE IS NOT ENABLED FOR ANY GPIOS (OR TEMP_IRQ FOR GPIO9),
NO INPUTS ARE SELECTED AS WAKEUP EVENTS
ALL PULLED UP INPUTS ARE SELECTED AS FALLED EDGE INPUTS,
ALL PULLED DOWN INPUTS ARE SELECTED AS RISING EDGE INPUTS

BUCKS, LDOS, TIMING

BUCK3_SW3 AND BUCK4_SW2 DEFAULT OFF
BUCK5 DEFAULT ON IN ACTIVE.
BUCK2 DEFAULT 1.0V.
LDO4 DEFAULT OFF IN ACTIVE, OFF IN HIB
LDO9 DEFAULT 2.80V.

LDO3_OFF_SLOT = 7 (MOVE LDO3 OFF-SLOT TO -8)
LDO13_OFF_SLOT = 2 (CHANGE LDO13 OFF-SLOT TO -3)

CHANGE OFF-SLOT TIMERS FROM 2MS TO 3MS. (T3/T4)
- SLOT_TIMINGS T3 = 2 AND T4 = 2 (3MS FOR BOTH)
MOVE BUCK5 ON-SLOT TO SLOT 3 AND OFF-SLOT TO SLOT -4.

SYNC MASTER=N/A SYNC DATE=N/A

PAGE TITLE
AMBER PMU(2/2)

Apple Inc.

DRAWING NUMBER 051-9478 SIZE D
REVISION 8.0.0
BRANCH
PAGE 13 OF 25
SHEET 13 OF 56

NOTICE OF PROPRIETARY PROPERTY:
THE INFORMATION CONTAINED HEREIN IS THE PROPRIETARY PROPERTY OF APPLE INC.
THE POSESSOR AGREES TO THE FOLLOWING:
I TO MAINTAIN THIS DOCUMENT IN CONFIDENCE
II NOT TO REPRODUCE OR COPY IT
III NOT TO REVEAL OR PUBLISH IT IN WHOLE OR PART
IV ALL RIGHTS RESERVED

CHESTNUT, BACKLIGHT DRIVER, MESA BOOST

D403 DISPLAY PMU
(TI CHESTNUT, 338S1172)

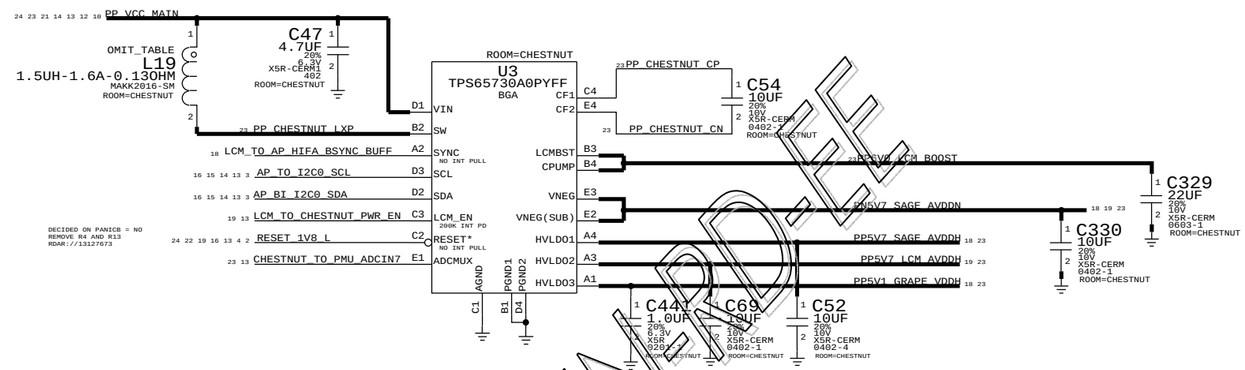

SAGE NEG BOOST TIMING INFO:
2 MS NOMIAL START UP DELAY FOR LCM POWER SEQUENCING
2 MS DELAY AT SHUTDOWN
ACTIVE DISCHARGE 2MS TO RAIL DOWN

D403 BACKLIGHT DRIVER
APN: 353S3721

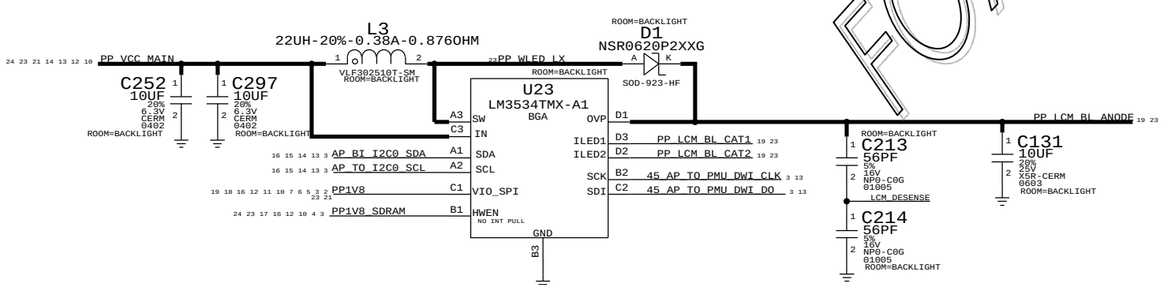

NOTE: STACKED TO MEET VOLTAGE REQ, LOOK INTO 18+V CAPS

MOJAVE
APN: 353S3978
VENDOR: TI

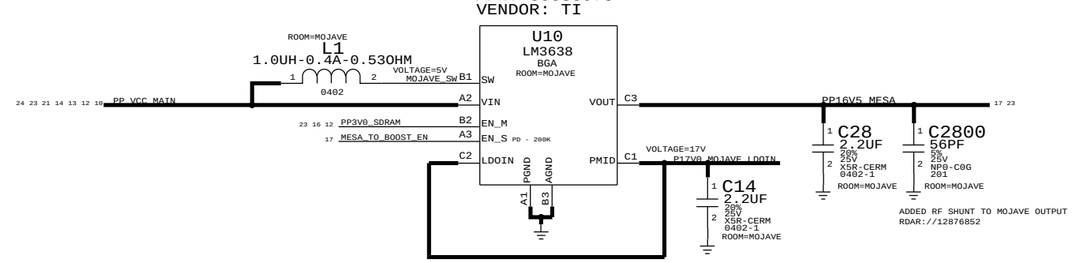

ADDED RF SHUNT TO MOJAVE OUTPUT
RDAR://12876852

Foxconn

SYNC MASTER=N/A	SYNC DATE=N/A
PAGE TITLE: CHESTNUT,BACKLIGHT DRIVER,MESA BOOST	
Apple Inc.	DRAWING NUMBER: 051-9478 / SIZE: D
	REVISION: 8.0.0
NOTICE OF PROPRIETARY PROPERTY:	BRANCH:
THE INFORMATION CONTAINED HEREIN IS THE PROPRIETARY PROPERTY OF APPLE INC. THE POSESSOR AGREES TO THE FOLLOWING: I TO MAINTAIN THIS DOCUMENT IN CONFIDENCE II NOT TO REPRODUCE OR COPY IT III NOT TO REVEAL OR PUBLISH IT IN WHOLE OR PART IV ALL RIGHTS RESERVED	PAGE: 14 OF 25
	SHEET: 14 OF 56

SPEAKER AMP, LED DRIVER

L19 SPEAKER AMP

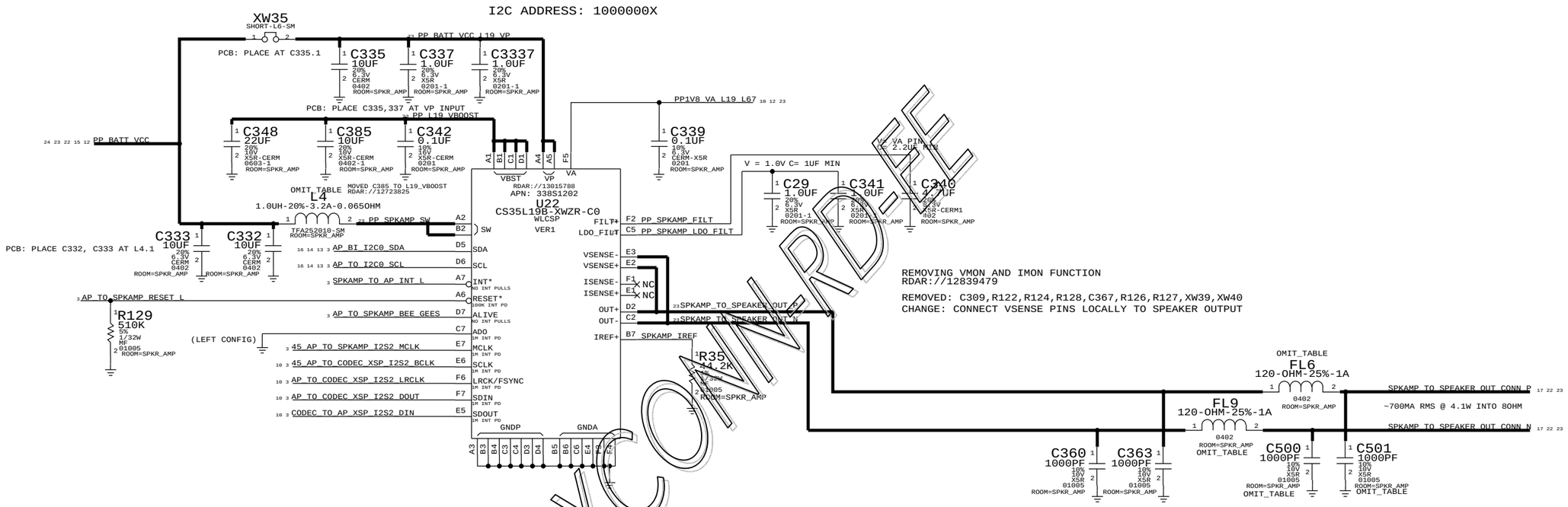

STROBE DRIVER (OPEL)

TI: APN 353S3899

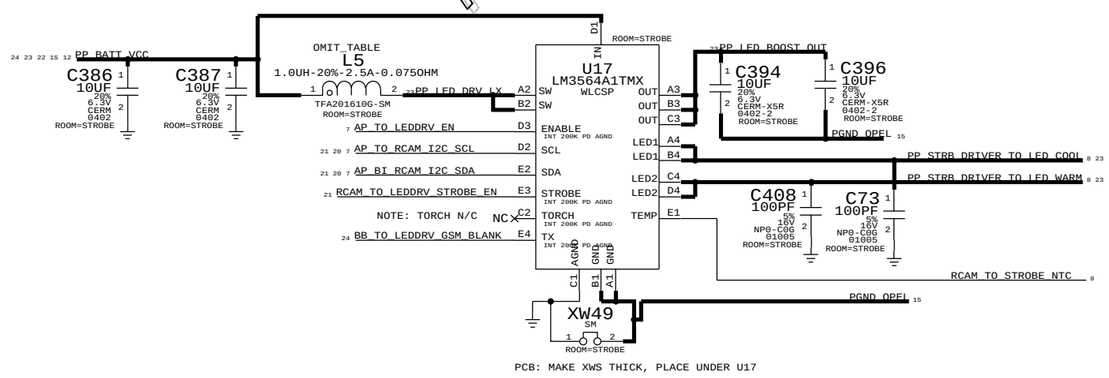

Apple Confidential

SYNC MASTER=N/A SYNC DATE=N/A

PAGE TITLE: SPKR AMP + STROBE DRIVER

Apple Inc.

DRAWING NUMBER: 051-9478 SIZE: D

REVISION: 8.0.0

BRANCH

PAGE: 15 OF 25

SHEET: 15 OF 56

NOTICE OF PROPRIETARY PROPERTY:
THE INFORMATION CONTAINED HEREIN IS THE PROPRIETARY PROPERTY OF APPLE INC.
THE POSESSOR AGREES TO THE FOLLOWING:
I TO MAINTAIN THIS DOCUMENT IN CONFIDENCE
II NOT TO REPRODUCE OR COPY IT
III NOT TO REVEAL OR PUBLISH IT IN WHOLE OR PART
IV ALL RIGHTS RESERVED

TRISTAR

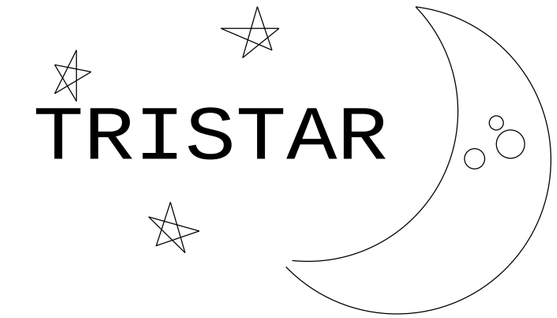

12C ADDRESS: 0011010X

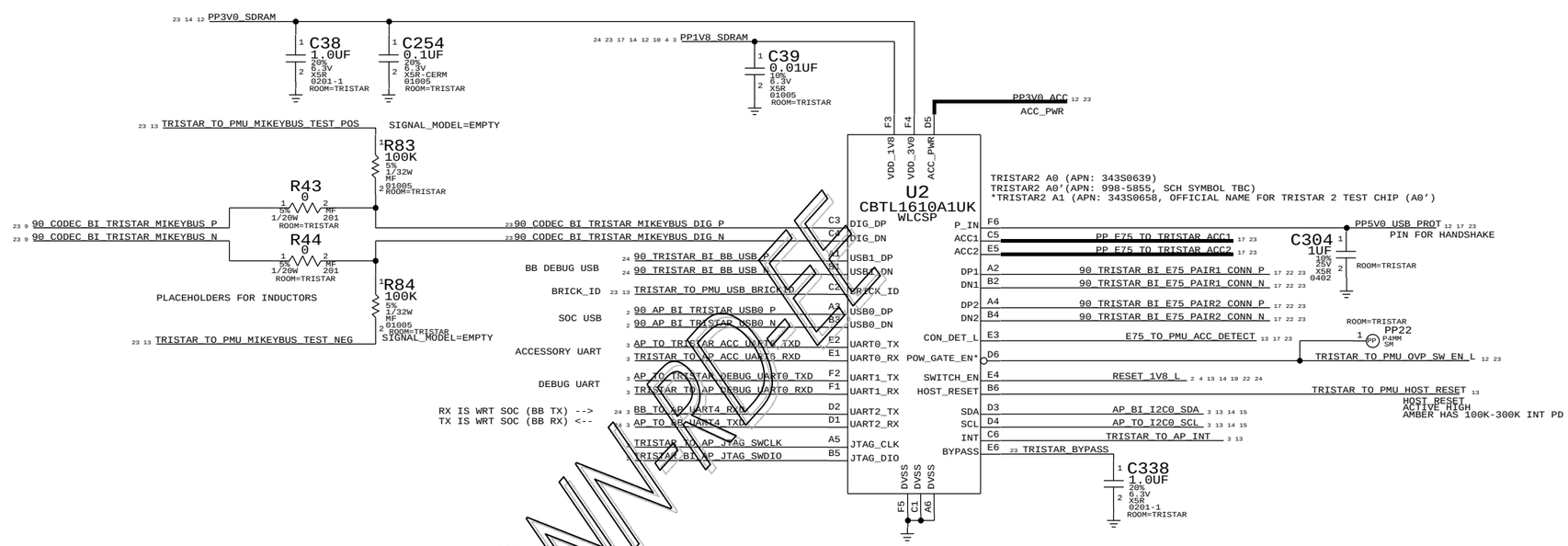

EEPROM

ONSEMI EEPROM

APN:335S0894

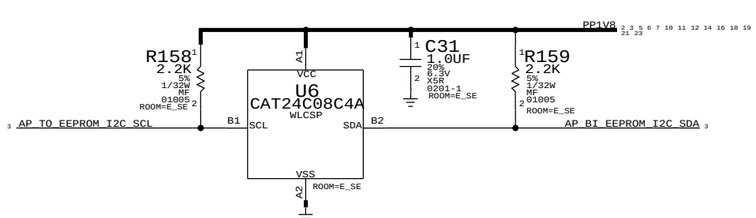

THROTTLER

RDAR://13057149

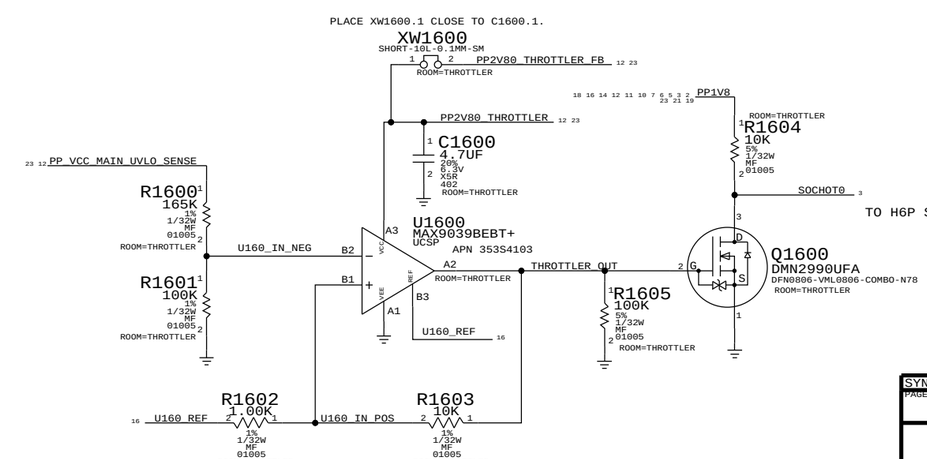

FOXCONN

SYNC_MASTER=N/A SYNC_DATE=N/A

PAGE TITLE: TRISTAR,EEPROM

Apple Inc.

DRAWING NUMBER: 051-9478 SIZE: D

REVISION: 8.0.0

BRANCH:

PAGE: 16 OF 25

SHEET: 16 OF 56

NOTICE OF PROPRIETARY PROPERTY:
THE INFORMATION CONTAINED HEREIN IS THE PROPRIETARY PROPERTY OF APPLE INC
THE POSESSOR AGREES TO THE FOLLOWING:
I TO MAINTAIN THIS DOCUMENT IN CONFIDENCE
II NOT TO REPRODUCE OR COPY IT
III NOT TO REVEAL OR PUBLISH IT IN WHOLE OR PART
IV ALL RIGHTS RESERVED

DOCKFLEX B2B

(USB VBUS, MENU BTN, SPEAKER, HP, HP EXTMIC, NAVAJO, ANTENNA LAT SW CTRL, MIC1 (PRIMARY MIC), ACC DET/ID/PWR, E75 DIFFPAIRS)

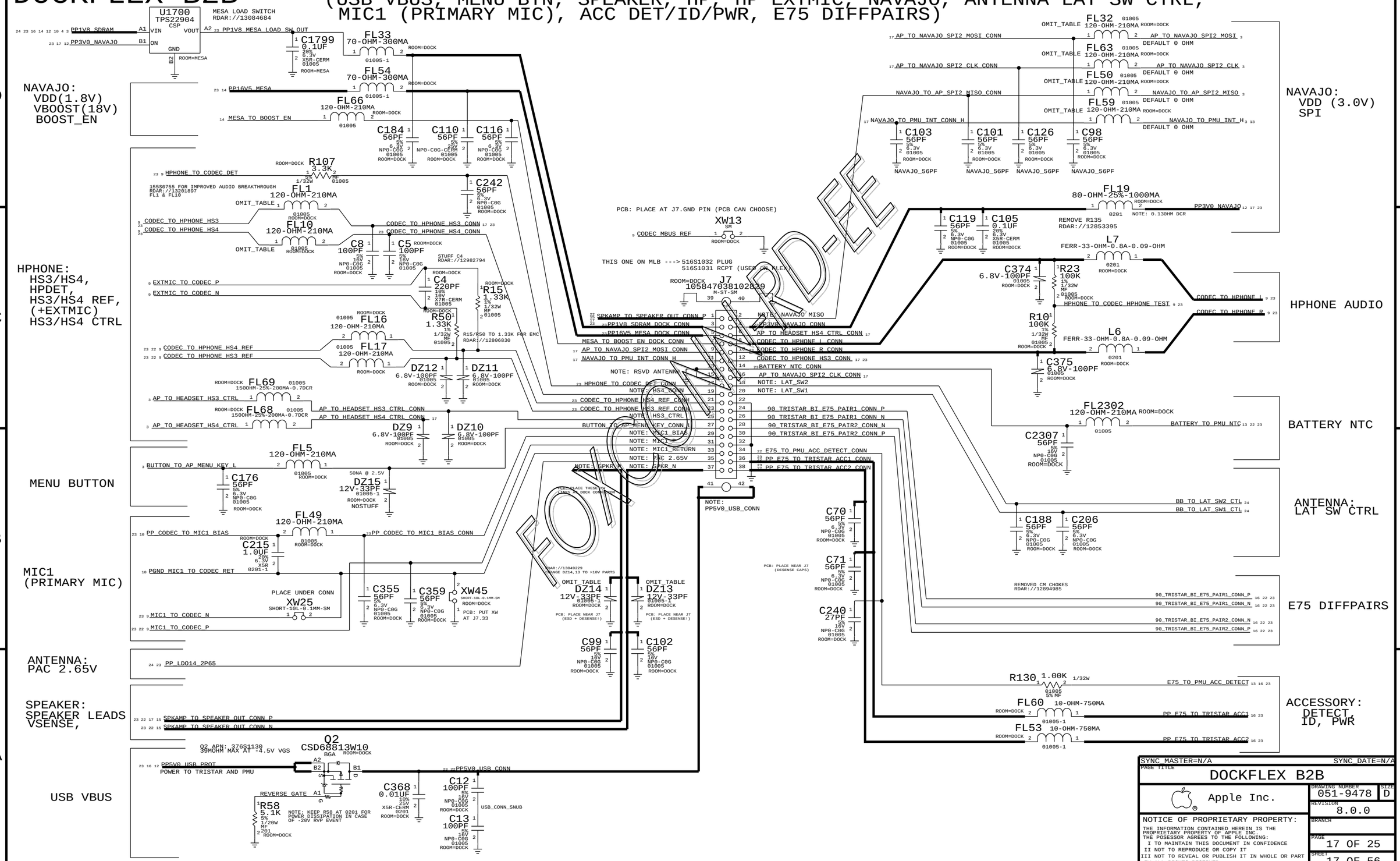

SYNC_MASTER=N/A SYNC_DATE=N/A

PAGE TITLE: DOCKFLEX B2B

Apple Inc.

DRAWING NUMBER: 051-9478 SIZE: D

REVISION: 8.0.0

BRANCH:

PAGE: 17 OF 25

SHEET: 17 OF 56

NOTICE OF PROPRIETARY PROPERTY:
THE INFORMATION CONTAINED HEREIN IS THE PROPRIETARY PROPERTY OF APPLE INC.
THE POSESSOR AGREES TO THE FOLLOWING:
I TO MAINTAIN THIS DOCUMENT IN CONFIDENCE
II NOT TO REPRODUCE OR COPY IT
III NOT TO REVEAL OR PUBLISH IT IN WHOLE OR PART
IV ALL RIGHTS RESERVED

D403 (B2B,DRIVER ICS)

SAGE2 C0

APN: 343S0645 (CD3246C0, T6)

CUMULUS C1

343S0638

TOUCH B2B

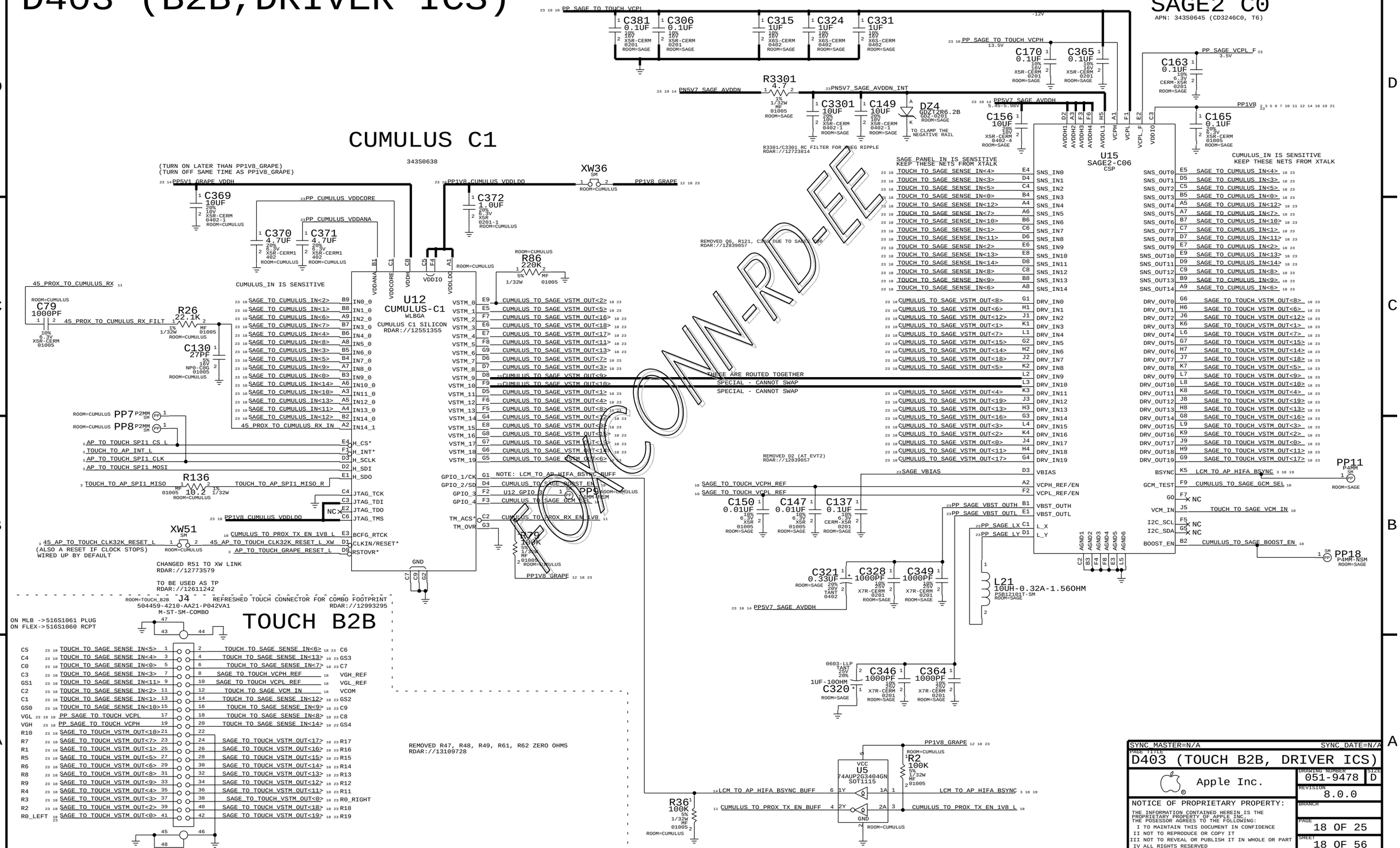

LCM B2B

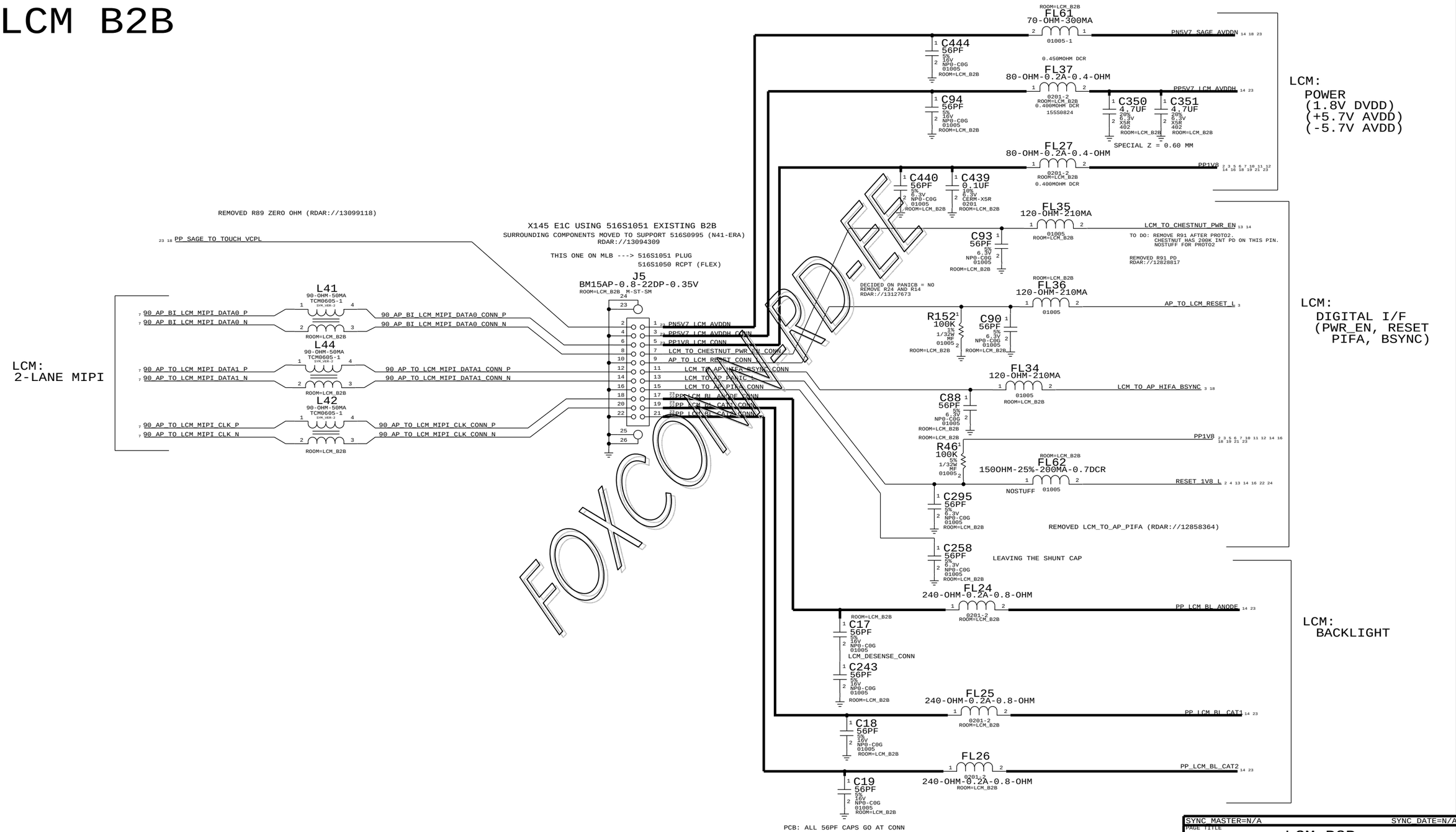

FOXCONN PEGATRON

SYNC_MASTER=N/A SYNC_DATE=N/A

PAGE TITLE: LCM B2B

Apple Inc.

DRAWING NUMBER: 051-9478 SIZE: D

REVISION: 8.0.0

BRANCH

PAGE: 19 OF 25

SHEET: 19 OF 56

NOTICE OF PROPRIETARY PROPERTY:
THE INFORMATION CONTAINED HEREIN IS THE PROPRIETARY PROPERTY OF APPLE INC.
THE POSESSOR AGREES TO THE FOLLOWING:
I TO MAINTAIN THIS DOCUMENT IN CONFIDENCE
II NOT TO REPRODUCE OR COPY IT
III NOT TO REVEAL OR PUBLISH IT IN WHOLE OR PART
IV ALL RIGHTS RESERVED

OSCAR + SENSORS

OSCAR MODULE (CONFORMAL COATED)

APN 337S4417

OSCAR VDDIO = 1.8V ALWAYS ON (NEED TO WAKE HOST & RUN PLL)
OSCAR CORE = 1.2V ALWAYS ON (NEED TO RUN IN S2RAM)

23 12 PP1V2_OSCAR — C92 1UF 20% 4V CERM 0402 ROOM=OSCAR — PP1V2_OSCAR_VDDC
ROOM=OSCAR C74 1UF 20% 4V CERM 0402 — PP1V8_OSCAR 12 20 23 — PP1V8_OSCAR_VDDIO

ROOM=OSCAR FL42 1500HM-25%-200MA-0.7DCR 01005 — 20 COMPASS_TO_OSCAR_INT_FL
ROOM=OSCAR FL40 1500HM-25%-200MA-0.7DCR 01005 — 20 OSCAR_TO_COMPASS_SPI_CS_FL_L
23 20 12 PP1V8_OSCAR — R154 392K 1% 1/32W MF 01005

TO DO: CHECK LEVEL SENSITIVITY OF ACCEL/GYRO INTS

OMIT_TABLE

U9 LPC18A1UR FCLGA SYM 1 OF 2

20 OSCAR_TO_ACCEL_SPI_CS_L	F4	PO_0	
20 OSCAR_TO_GYRO_SPI_CS_L	F6	PO_1	
20 ACCEL_TO_OSCAR_INT1	F7	PO_2	
20 GYRO_TO_OSCAR_INT2	D6	PO_3	
20 GYRO_TO_OSCAR_INT1	E6	PO_4	
20 ACCEL_TO_OSCAR_INT2	F3	PO_5	
COMPASS_TO_OSCAR_INT	E4	PO_6	
OSCAR_TO_COMPASS_SPI_CS_L	E5	PO_7	
3 OSCAR_BI_AP_TIME_SYNC_HOST_INT	F2	PO_8	
13 3 OSCAR_TO_PMU_HOST_WAKE	B4	PO_9	
21 15 7 AP_BI_RCAM_I2C_SDA	B3	PO_10	
3 AP_TO_OSCAR_RESET_L	F5	RESET*	
AP_TO_RCAM_I2C_SCL 7 15 21	B2	PO_11	
OSCAR_TO_IMU_SPI_SCLK	C3	PO_12	
IMU_TO_OSCAR_SPI_MISO	B5	PO_13	
OSCAR_TO_IMU_SPI_MOSI	C4	PO_14	
OSCAR_TO_AP_UART2_RXD 3	C5	PO_15	
AP_TO_OSCAR_UART2_TXD 3	B6	PO_16	
OSCAR_TO_RADIO_CONTEXT_A 24	C6	PO_17	
OSCAR_TO_RADIO_CONTEXT_B 24	D4	PO_18	
AP_BI_OSCAR_SWDIO_1V8 3	D5	PO_19	
AP_TO_OSCAR_SWDCLK_1V8 3	C7	PO_20	
45_PMU_TO_OSCAR_CLK32K 13	E2	PO_21	
	B7	PO_22	NC
AP_TO_OSCAR_DBGEN 3	E3	DBGEN	

VDDC D2, VDDC D7, VDDIO D3; VSS C2, VSS E7

NOTE: REPLACED WITH CSP PACKAGE, BUT NEW PACKAGE COMING FROM VENDOR FOR PROTO2

ROOM=OSCAR FL41 1500HM-25%-200MA-0.7DCR 01005 — OSCAR_TO_IMU_SPI_SCLK_FL 20
ROOM=OSCAR FL55 70-OHM-300MA 01005 — IMU_TO_OSCAR_SPI_MISO_FL 20
ROOM=OSCAR FL56 1500HM-25%-200MA-0.7DCR 01005 — OSCAR_TO_IMU_SPI_MOSI_FL 20

OSCAR MODULE GND BALLS

(THIS SYMBOL DOES NOT EXIST ON OSCAR CSP)

OMIT_TABLE

U9 LPC18A1UR FCLGA SYM 2 OF 2

A2	GND	GND	D8
A3	GND	GND	E1
A4	GND	GND	E8
A5	GND	GND	F1
A6	GND	GND	F8
A7	GND	GND	G2
B1	GND	GND	G3
B8	GND	GND	G4
C1	GND	GND	G5
C8	GND	GND	G6
D1	GND	GND	G7

THIS PART OUTSIDE OF SHIELD

COMPASS

COMPASS CSP: 338S1014
COMPASS INTERPOSER (FOOTPRINT ONLY): 998-5120
COMPASS INTERPOSER MODULE: 639-4269

FL38 150OHM-25%-200MA-0.7DCR 01005 — 23 20 12 PP3V0_IMU — 23 PP3V0_COMP
C298 1.0UF 20% 6.3V X5R 0201-1 ROOM=COMPASS

OMIT_TABLE ROOM=COMPASS

U16 AK8963C CSP-POP

D1	CAD0	SCL/SK	A3 — OSCAR_TO_IMU_SPI_SCLK_FL 20
D2	CAD1	SDA/SI	A4 — OSCAR_TO_IMU_SPI_MOSI_FL 20
NC C2	TST1	CSB*	A2 — OSCAR_TO_COMPASS_SPI_CS_FL_L 20
NC B3	RSV	SO	B4 — IMU_TO_OSCAR_SPI_MISO_FL 20
NC C3	TRG	DRDY	A1 — COMPASS_TO_OSCAR_INT_FL 20
23 20 PP1V8_COMP D4	RST*		

VDD VID; VSS C1; C4

23 20 PP1V8_COMP — C300 0.1UF 20% 6.3V X5R-CERM 01005 ROOM=COMPASS

ROOM=COMPASS FL39 1500HM-25%-200MA-0.7DCR 01005 — PP1V8_OSCAR 12 20 23

COMPASS INTERPOSER

PART#	QTY	DESCRIPTION	REFERENCE DESIGNATOR(S)	CRITICAL	BOM OPTION
639-4269	1	COMPASS INTERPOSER X152/X145	U16	CRITICAL	COMPASS_INTERPOSER

THESE PARTS INSIDE OF SHIELD

GYRO

ST MICRO AP3GDL20HAB, APN 338S1192

23 20 12 PP3V0_IMU — C345 0.1UF 20% 6.3V X5R-CERM 01005 ROOM=GYRO — C347 1.0UF 20% 6.3V X5R 0201-1 ROOM=GYRO — PP1V8_OSCAR 12 20 23 — C344 0.1UF 20% 6.3V X5R-CERM 01005 ROOM=GYRO

CKPLUS_WAIVE=PWRTERM2GND

U8 AP3GDL20HAB18TR LGA

20 OSCAR_TO_GYRO_SPI_CS_L	CS	SCL/SPC	2 — OSCAR_TO_IMU_SPI_SCLK_FL 20
20 GYRO_TO_OSCAR_INT2	DRDY/INT2	SDA/SDI/SDO	3 — OSCAR_TO_IMU_SPI_MOSI_FL 20
NO CAMERA VSYNC PIN	DEN	SDO/SA0	4 — IMU_TO_OSCAR_SPI_MISO_FL 20
20 GYRO_TO_OSCAR_INT1	INT1	RES0	9
		RES1	10
		RES2	11
		CAP	14 — GYRO_PUMP

RES/VDD 15, VDD 16, VDD_IO 1, GND 13, GND 12

11V CHARGE PUMP — C11 0.01UF 10% 25V X5R-CERM 0201 ROOM=GYRO

ACCELEROMETER

ST MICRO AP2DHAB, APN 338S1191

23 20 12 PP3V0_IMU — C334 1.0UF 20% 6.3V X5R 0201-1 ROOM=ACCEL — C336 0.01UF 10% 6.3V X5R 01005 ROOM=ACCEL — PP1V8_OSCAR 12 20 23 — C3345 0.1UF 20% 6.3V X5R-CERM 01005 ROOM=ACCEL

U18 AP2DHAB24TR LGA

20 OSCAR_TO_ACCEL_SPI_CS_L	CS	SCL/SPC	1 — OSCAR_TO_IMU_SPI_SCLK_FL 20
	RES	SDA/SDI/SDO	2 — OSCAR_TO_IMU_SPI_MOSI_FL 20
	RES	SDO/SA0	3 — IMU_TO_OSCAR_SPI_MISO_FL 20
	RES		
20 ACCEL_TO_OSCAR_INT1	INT1	RES	13
20 ACCEL_TO_OSCAR_INT2	INT2	RES	14

VDD 8, VDD_IO 7, GND 9

TO DO: VERIFY CONNECTIONS ON ACCEL (CS, SDO PINS)

Foxconn-RD-EE

SYNC_MASTER=N/A SYNC_DATE=N/A

PAGE TITLE	OSCAR + SENSORS
Apple Inc.	DRAWING NUMBER 051-9478 SIZE D
	REVISION 8.0.0
	BRANCH
	PAGE 20 OF 25
	SHEET 20 OF 56

NOTICE OF PROPRIETARY PROPERTY:
THE INFORMATION CONTAINED HEREIN IS THE PROPRIETARY PROPERTY OF APPLE INC.
THE POSESSOR AGREES TO THE FOLLOWING:
I TO MAINTAIN THIS DOCUMENT IN CONFIDENCE
II NOT TO REPRODUCE OR COPY IT
III NOT TO REVEAL OR PUBLISH IT IN WHOLE OR PART
IV ALL RIGHTS RESERVED

RCAM B2B (REAR CAMERA CONNECTOR)

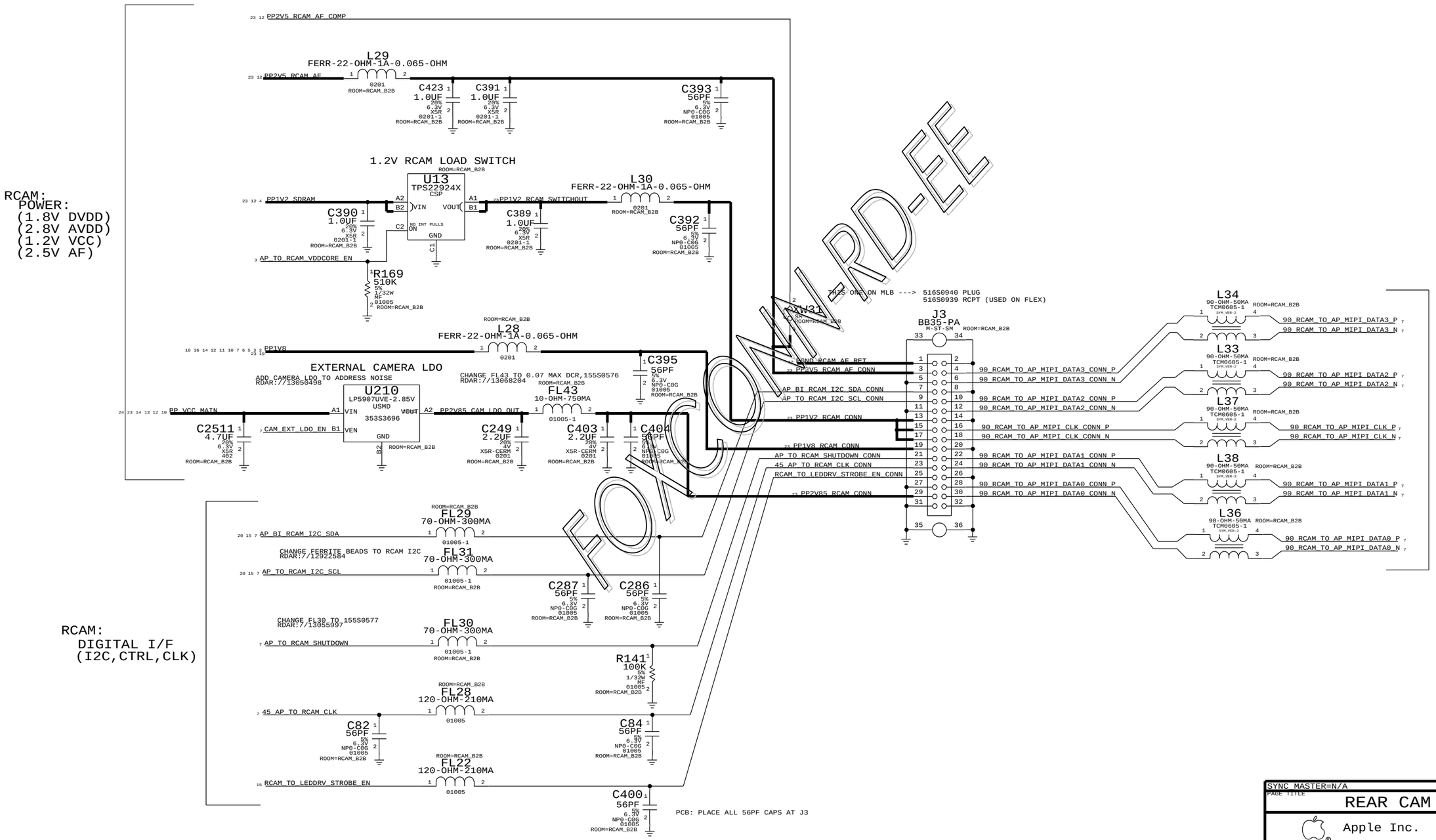

SYNC_MASTER=N/A SYNC_DATE=N/A

PAGE TITLE: REAR CAM B2B

Apple Inc.

DRAWING NUMBER: 051-9478 SIZE: D

REVISION: 8.0.0

BRANCH:

PAGE: 21 OF 25

SHEET: 21 OF 56

NOTICE OF PROPRIETARY PROPERTY:
THE INFORMATION CONTAINED HEREIN IS THE PROPRIETARY PROPERTY OF APPLE INC.
THE POSESSOR AGREES TO THE FOLLOWING:
I TO MAINTAIN THIS DOCUMENT IN CONFIDENCE
II NOT TO REPRODUCE OR COPY IT
III NOT TO REVEAL OR PUBLISH IT IN WHOLE OR PART
IV ALL RIGHTS RESERVED

BATT CONN, TPS, STANDOFFS/SHIELDS/FIDUCIALS

BATTERY CONN

THIS ONE ON MLB ---> 516S1068 RCPT
516S1067 PLUG (USED ON BATTERY PCM)

J6
RCPT-BATT-0.80
F-ST-SM
ROOM=BATTERY

FL11
120-OHM-210MA
01005
ROOM=BATTERY

C279 56PF 5% 16V NP0-C0G 01005 ROOM=BATTERY

AP_BI_BATTERY_SWI

PP_BATT_VCC

AP_BI_BATTERY_SWI_CONN

C23 56PF 5% 16V NP0-C0G 01005 ROOM=BATTERY

C25 56PF 5% 16V NP0-C0G 01005 ROOM=BATTERY

XW12
ROOM=BATTERY
SHORT-18L-0.25MM-SM

C9 56PF 5% 16V NP0-C0G 01005 ROOM=BATTERY

C275 220PF 10% 16V X7R-CERM 01005 ROOM=BATTERY

C22 56PF 5% 16V NP0-C0G 01005 ROOM=BATTERY

PCB: PLACE XW12 AT BATT CONN, PIN 7
BATTERY_TO_PMU_SENSE

FIDUCIALS

FD1 FID 0P5SM1P0SQ-NSP
FD2 FID 0P5SM1P0SQ-NSP
FD3 FID 0P5SM1P0SQ-NSP
FD4 FID 0P5SM1P0SQ-NSP
FD5 FID 0P5SM1P0SQ-NSP
FD6 FID 0P5SM1P0SQ-NSP
FD7 FID 0P5SM1P0SQ-NSP

SHIELDS

SH1 SM 806-4227 SHLD-X145-EMI-UPPER-FRONT
SH2 SM 806-4228 SHLD-X145-EMI-LOWER-FRONT
SH3 SM 806-4229 SHLD-X145-EMI-UPPER-BACK
SH4 SM 806-4230 SHLD-X145-EMI-LOWER-BACK

COWLING

SP1 CLIP-SM
SPRING-SUPER-COWLING-GROUND-X145

AC COUPLED SCREW HOLES + STANDOFFS

(ON NORTH END OF SINGLE_BRD, TO MITIGATE COMPASS RETURN CURRENTS)

SCREW HOLES

PGND_SCREW_HOLE1

C427 100PF 5% 16V NP0-C0G 01005
C430 56PF 5% 16V NP0-C0G 01005
C432 27PF 5% 16V NP0-C0G 01005

STANDOFFS

BS1
STDOFF-2.70D1.4ID-0.94H-SM
860-1608

PGND_STANDOFF1

C433 100PF 5% 16V NP0-C0G 01005
C435 56PF 5% 16V NP0-C0G 01005
C437 27PF 5% 16V NP0-C0G 01005

BS2
STDOFF-2.70D1.4ID-0.94H-SM
860-1608

PGND_STANDOFF2

C434 100PF 5% 16V NP0-C0G 01005
C436 56PF 5% 16V NP0-C0G 01005
C438 27PF 5% 16V NP0-C0G 01005

TESTPOINTS

POWER TP

TP1 TP-P6 — PP5V0_USB_CONN — VBUS
TP2 TP-P90 — POWER GROUND (SUPERSIZE)
TP200 TP-P6 — POWER GROUND
TP12 TP-P80 — PP_BATT_VCC — VBAT (SUPERSIZE)
TP4 TO NOW BATT_VCC
RDAR://13068293
TP4 TP-P6 — PP_BATT_VCC — VBAT (SECONDARY)
TP120 TP-P55 — PP_BATT_VCC — VBAT (BOTTOMSIDE FOR RF)
TP40 TP-P55 — PP_BATT_VCC — VBAT (BOTTOMSIDE FOR RF)
TP5 TP-P6 — BATTERY_TO_PMU_NTC — BATTERY NTC

SUPER TP

TP6 TP-P6 — PMU_TO_TP_AMUX_AY — ANALOG MUX A OUTPUT
TP7 TP-P6 — PMU_TO_TP_AMUX_BY — ANALOG MUX B OUTPUT

RESET

TP8000 TP-P6 — RESET_1V8_L — H6P & BB RESET

DFU

TP9 TP-P6 — FORCE_DFU — FORCE DFU

HEADPHONE MIC

TP28 TP-P6 — CODEC_TO_HPHONE_HS3_REF — HEADPHONE MIC NEG
TP29 TP-P6 — CODEC_TO_HPHONE_HS4_REF — HEADPHONE MIC POS

LCM BACKLIGHT

TP18 TP-P6 — PP_LCM_BL_CAT1_CONN — LCD BACKLIGHT SINK1
TP19 TP-P6 — PP_LCM_BL_CAT2_CONN — LCD BACKLIGHT SINK2
TP20 TP-P6 — PP_LCM_BL_ANODE_CONN — LCD BACKLIGHT SOURCE

E75 - USB/UART/ID/POWER

TP21 TP-P55 — 90_TRISTAR_BI_E75_PAIR1_CONN_P
TP22 TP-P55 — 90_TRISTAR_BI_E75_PAIR1_CONN_N
TP23 TP-P55 — 90_TRISTAR_BI_E75_PAIR2_CONN_P
TP24 TP-P55 — 90_TRISTAR_BI_E75_PAIR2_CONN_N
TP26 TP-P6 — PP_E75_TO_TRISTAR_ACC1_CONN
TP27 TP-P6 — PP_E75_TO_TRISTAR_ACC2_CONN
ACCESSORY ID AND POWER

TP32 TP-P6 — POWER GROUND

TP10 TP-P6 — E75_TO_PMU_ACC_DETECT_CONN — FOR DIAGS

DUPLICATE TESTPOINTS FOR UAT MATCHING RF FIXTURE
RDAR://13159278

TP2200 TP-P6 — PP_E75_TO_TRISTAR_ACC1_CONN
TP2202 TP-P6 — E75_TO_PMU_ACC_DETECT_CONN

MIC AUDIO

TP15 TP-P6 — MIC1_TO_CODEC_P — MIC1 POSITIVE
TP16 TP-P6 — MIC2_TO_CODEC_P — MIC2 POSITIVE
TP17 TP-P6 — MIC3_TO_CODEC_P — MIC3 POSITIVE

DRIVE MIC WRT NEAREST GROUND TEST POINT

TP3 TP-P6 — SPKAMP_TO_SPEAKER_OUT_CONN_P — SPKR POSITIVE
ADDED PER
RDAR://12611131
TP11 TP-P6 — SPKAMP_TO_SPEAKER_OUT_CONN_N — SPKR NEGATIVE

FoxconnDevel

SYNC_MASTER=N/A SYNC_DATE=N/A
PAGE TITLE
BATT B2B, TPS, PD FEATURES
Apple Inc.
DRAWING NUMBER 051-9478
SIZE D
REVISION 8.0.0
BRANCH
PAGE 22 OF 25
SHEET 22 OF 56

NOTICE OF PROPRIETARY PROPERTY:
THE INFORMATION CONTAINED HEREIN IS THE PROPRIETARY PROPERTY OF APPLE INC.
THE POSESSOR AGREES TO THE FOLLOWING:
I TO MAINTAIN THIS DOCUMENT IN CONFIDENCE
II NOT TO REPRODUCE OR COPY IT
III NOT TO REVEAL OR PUBLISH IT IN WHOLE OR PART
IV ALL RIGHTS RESERVED

Ref	Voltage	Net
18	VOLTAGE=4.55V	CUMULUS_TO_SAGE_VSTM_OUT<0>
18	VOLTAGE=4.55V	CUMULUS_TO_SAGE_VSTM_OUT<1>
18	VOLTAGE=4.55V	CUMULUS_TO_SAGE_VSTM_OUT<2>
18	VOLTAGE=4.55V	CUMULUS_TO_SAGE_VSTM_OUT<3>
18	VOLTAGE=4.55V	CUMULUS_TO_SAGE_VSTM_OUT<4>
18	VOLTAGE=4.55V	CUMULUS_TO_SAGE_VSTM_OUT<5>
18	VOLTAGE=4.55V	CUMULUS_TO_SAGE_VSTM_OUT<6>
18	VOLTAGE=4.55V	CUMULUS_TO_SAGE_VSTM_OUT<7>
18	VOLTAGE=4.55V	CUMULUS_TO_SAGE_VSTM_OUT<8>
18	VOLTAGE=4.55V	CUMULUS_TO_SAGE_VSTM_OUT<9>
18	VOLTAGE=4.55V	CUMULUS_TO_SAGE_VSTM_OUT<10>
18	VOLTAGE=4.55V	CUMULUS_TO_SAGE_VSTM_OUT<11>
18	VOLTAGE=4.55V	CUMULUS_TO_SAGE_VSTM_OUT<12>
18	VOLTAGE=4.55V	CUMULUS_TO_SAGE_VSTM_OUT<13>
18	VOLTAGE=4.55V	CUMULUS_TO_SAGE_VSTM_OUT<14>
18	VOLTAGE=4.55V	CUMULUS_TO_SAGE_VSTM_OUT<15>
18	VOLTAGE=4.55V	CUMULUS_TO_SAGE_VSTM_OUT<16>
18	VOLTAGE=4.55V	CUMULUS_TO_SAGE_VSTM_OUT<17>
18	VOLTAGE=4.55V	CUMULUS_TO_SAGE_VSTM_OUT<18>
18	VOLTAGE=4.55V	CUMULUS_TO_SAGE_VSTM_OUT<19>
18	VOLTAGE=4.55V	TOUCH_TO_SAGE_SENSE_IN<0>
18	VOLTAGE=4.55V	TOUCH_TO_SAGE_SENSE_IN<1>
18	VOLTAGE=4.55V	TOUCH_TO_SAGE_SENSE_IN<2>
18	VOLTAGE=4.55V	TOUCH_TO_SAGE_SENSE_IN<3>
18	VOLTAGE=4.55V	TOUCH_TO_SAGE_SENSE_IN<4>
18	VOLTAGE=4.55V	TOUCH_TO_SAGE_SENSE_IN<5>
18	VOLTAGE=4.55V	TOUCH_TO_SAGE_SENSE_IN<6>
18	VOLTAGE=4.55V	TOUCH_TO_SAGE_SENSE_IN<7>
18	VOLTAGE=4.55V	TOUCH_TO_SAGE_SENSE_IN<8>
18	VOLTAGE=4.55V	TOUCH_TO_SAGE_SENSE_IN<9>
18	VOLTAGE=4.55V	TOUCH_TO_SAGE_SENSE_IN<10>
18	VOLTAGE=4.55V	TOUCH_TO_SAGE_SENSE_IN<11>
18	VOLTAGE=4.55V	TOUCH_TO_SAGE_SENSE_IN<12>
18	VOLTAGE=4.55V	TOUCH_TO_SAGE_SENSE_IN<13>
18	VOLTAGE=4.55V	TOUCH_TO_SAGE_SENSE_IN<14>
18	VOLTAGE=4.55V	SAGE_TO_TOUCH_VSTM_OUT<0>
18	VOLTAGE=4.55V	SAGE_TO_TOUCH_VSTM_OUT<1>
18	VOLTAGE=4.55V	SAGE_TO_TOUCH_VSTM_OUT<2>
18	VOLTAGE=4.55V	SAGE_TO_TOUCH_VSTM_OUT<3>
18	VOLTAGE=4.55V	SAGE_TO_TOUCH_VSTM_OUT<4>
18	VOLTAGE=4.55V	SAGE_TO_TOUCH_VSTM_OUT<5>
18	VOLTAGE=4.55V	SAGE_TO_TOUCH_VSTM_OUT<6>
18	VOLTAGE=4.55V	SAGE_TO_TOUCH_VSTM_OUT<7>
18	VOLTAGE=4.55V	SAGE_TO_TOUCH_VSTM_OUT<8>
18	VOLTAGE=4.55V	SAGE_TO_TOUCH_VSTM_OUT<9>
18	VOLTAGE=4.55V	SAGE_TO_TOUCH_VSTM_OUT<10>
18	VOLTAGE=4.55V	SAGE_TO_TOUCH_VSTM_OUT<11>
18	VOLTAGE=4.55V	SAGE_TO_TOUCH_VSTM_OUT<12>
18	VOLTAGE=4.55V	SAGE_TO_TOUCH_VSTM_OUT<13>
18	VOLTAGE=4.55V	SAGE_TO_TOUCH_VSTM_OUT<14>
18	VOLTAGE=4.55V	SAGE_TO_TOUCH_VSTM_OUT<15>
18	VOLTAGE=4.55V	SAGE_TO_TOUCH_VSTM_OUT<16>
18	VOLTAGE=4.55V	SAGE_TO_TOUCH_VSTM_OUT<17>
18	VOLTAGE=4.55V	SAGE_TO_TOUCH_VSTM_OUT<18>
18	VOLTAGE=4.55V	SAGE_TO_TOUCH_VSTM_OUT<19>

Ref	Voltage	Net
11 9	VOLTAGE=3.8V	CODEC_TO_RCVR_P
11 9	VOLTAGE=3.8V	CODEC_TO_RCVR_N
11	VOLTAGE=3.8V	CODEC_TO_RCVR_CONN_P
11	VOLTAGE=3.8V	CODEC_TO_RCVR_CONN_N
11 9	VOLTAGE=3.8V	CODEC_TO_HAC_P
11 9	VOLTAGE=3.8V	CODEC_TO_HAC_N
11	VOLTAGE=3.8V	CODEC_TO_HAC_CONN_P
11	VOLTAGE=3.8V	CODEC_TO_HAC_CONN_N
17 9	VOLTAGE=3.114V	CODEC_TO_HPHONE_L
17 9	VOLTAGE=3.114V	CODEC_TO_HPHONE_R
17	VOLTAGE=3.114V	CODEC_TO_HPHONE_L_CONN
17	VOLTAGE=3.114V	CODEC_TO_HPHONE_R_CONN
17 9	VOLTAGE=2.7V	CODEC_TO_HPHONE_HS3
17 9	VOLTAGE=2.7V	CODEC_TO_HPHONE_HS4
22 17 9	VOLTAGE=2.7V	CODEC_TO_HPHONE_HS3_REF
22 17 9	VOLTAGE=2.7V	CODEC_TO_HPHONE_HS4_REF
17	VOLTAGE=2.7V	CODEC_TO_HPHONE_HS3_CONN
17	VOLTAGE=2.7V	CODEC_TO_HPHONE_HS4_CONN
17	VOLTAGE=2.7V	CODEC_TO_HPHONE_HS3_REF_CONN
17	VOLTAGE=2.7V	CODEC_TO_HPHONE_HS4_REF_CONN
17 9	VOLTAGE=4.3V	HPHONE_TO_CODEC_DET
17	VOLTAGE=4.3V	HPHONE_TO_CODEC_DET_CONN
9	VOLTAGE=2.5V	90_CODEC_BI_TRISTAR_MIKEYBUS_L67_P
9	VOLTAGE=2.5V	90_CODEC_BI_TRISTAR_MIKEYBUS_L67_N
16 9	VOLTAGE=2.5V	90_CODEC_BI_TRISTAR_MIKEYBUS_P
16 9	VOLTAGE=2.5V	90_CODEC_BI_TRISTAR_MIKEYBUS_N
16	VOLTAGE=2.5V	90_CODEC_BI_TRISTAR_MIKEYBUS_DIG_P
16	VOLTAGE=2.5V	90_CODEC_BI_TRISTAR_MIKEYBUS_DIG_N
16 13	VOLTAGE=2.5V	TRISTAR_TO_PMU_MIKEYBUS_TEST_POS
16 13	VOLTAGE=2.5V	TRISTAR_TO_PMU_MIKEYBUS_TEST_NEG
9	VOLTAGE=1.8V	MIC1_TO_CODEC_L67_P
9	VOLTAGE=1.8V	MIC1_TO_CODEC_L67_N
22 17 9	VOLTAGE=1.8V	MIC1_TO_CODEC_P
17 9	VOLTAGE=1.8V	MIC1_TO_CODEC_N
9	VOLTAGE=1.8V	MIC2_TO_CODEC_L67_P
9	VOLTAGE=1.8V	MIC2_TO_CODEC_L67_N
22 9 8	VOLTAGE=1.8V	MIC2_TO_CODEC_P
9 8	VOLTAGE=1.8V	MIC2_TO_CODEC_N
9	VOLTAGE=1.8V	MIC3_TO_CODEC_L67_P
9	VOLTAGE=1.8V	MIC3_TO_CODEC_L67_N
22 11 9	VOLTAGE=1.8V	MIC3_TO_CODEC_P
11 9	VOLTAGE=1.8V	MIC3_TO_CODEC_N
11 9	VOLTAGE=3.8V	RCVR_TO_CODEC_RCVR_TEST
9	VOLTAGE=3.8V	RCVR_TO_CODEC_RCVR_TEST_L67
17 9	VOLTAGE=3.114V	HPHONE_TO_CODEC_HPHONE_TEST
9	VOLTAGE=3.114V	HPHONE_TO_CODEC_HPHONE_TEST_L67
11 9	VOLTAGE=3.8V	HAC_TO_CODEC_TEST
9	VOLTAGE=3.8V	HAC_TO_CODEC_TEST_L67
12	VOLTAGE=4.6V	45_PMU_VPUMP
12	VOLTAGE=4.3V	PMU_ACT_DIO
16 12	VOLTAGE=3.6V	TRISTAR_TO_PMU_OVP_SW_EN_L
12 2	VOLTAGE=3.2V	USB_VBUS_DETECT
16 12	VOLTAGE=5.25V	TRISTAR_TO_PMU_USB_BRICKID
12	VOLTAGE=5.25V	TRISTAR_TO_PMU_USB_BRICKID_R

Ref	Voltage	Net
22 17 13	VOLTAGE=2.5V	BATTERY_TO_PMU_NTC
17	VOLTAGE=2.5V	BATTERY_NTC_CONN
22 12	VOLTAGE=4.2V	BATTERY_TO_PMU_SENSE
22 17 15	VOLTAGE=8V	SPKAMP_TO_SPEAKER_OUT_CONN_P
22 17 15	VOLTAGE=8V	SPKAMP_TO_SPEAKER_OUT_CONN_N
15	VOLTAGE=8V	SPKAMP_TO_SPEAKER_OUT_P
15	VOLTAGE=8V	SPKAMP_TO_SPEAKER_OUT_N
22 17 16	VOLTAGE=5.25V	90_TRISTAR_BI_E75_PAIR1_CONN_P
22 17 16	VOLTAGE=5.25V	90_TRISTAR_BI_E75_PAIR1_CONN_N
22 17 16	VOLTAGE=5.25V	90_TRISTAR_BI_E75_PAIR2_CONN_P
22 17 16	VOLTAGE=5.25V	90_TRISTAR_BI_E75_PAIR2_CONN_N
16	VOLTAGE=3.0V	TRISTAR_BYPASS
19 18 14	VOLTAGE=-5.7V	PN5V7_SAGE_AVDDN
18	VOLTAGE=-5.7V	PN5V7_SAGE_AVDDN_INT
19	VOLTAGE=-5.7V	PN5V7_LCM_AVDDN
18	VOLTAGE=2.5V	SAGE_VBIAS
20	VOLTAGE=11V	GYRO_PUMP
18	VOLTAGE=XV	SAGE_TO_CUMULUS_IN<0>
18	VOLTAGE=XV	SAGE_TO_CUMULUS_IN<1>
18	VOLTAGE=XV	SAGE_TO_CUMULUS_IN<2>
18	VOLTAGE=XV	SAGE_TO_CUMULUS_IN<3>
18	VOLTAGE=XV	SAGE_TO_CUMULUS_IN<4>
18	VOLTAGE=XV	SAGE_TO_CUMULUS_IN<5>
18	VOLTAGE=XV	SAGE_TO_CUMULUS_IN<6>
18	VOLTAGE=XV	SAGE_TO_CUMULUS_IN<7>
18	VOLTAGE=XV	SAGE_TO_CUMULUS_IN<8>
18	VOLTAGE=XV	SAGE_TO_CUMULUS_IN<9>
18	VOLTAGE=XV	SAGE_TO_CUMULUS_IN<10>
18	VOLTAGE=XV	SAGE_TO_CUMULUS_IN<11>
18	VOLTAGE=XV	SAGE_TO_CUMULUS_IN<12>
18	VOLTAGE=XV	SAGE_TO_CUMULUS_IN<13>
18	VOLTAGE=XV	SAGE_TO_CUMULUS_IN<14>
17 14	VOLTAGE=18.0V	PP16V5_MESA
17	VOLTAGE=18.0V	PP16V5_MESA_DOCK_CONN
12 7 2	VOLTAGE=1.0V	PP1V0
12 4	VOLTAGE=1.0V	PP1V0_SOC
12 5	VOLTAGE=1.0V	PP1V0_SRAM
12 4	VOLTAGE=1.1V	PP1V1_CPU
12 4	VOLTAGE=1.1V	PP1V1_GPU
12 5 4 2	VOLTAGE=1.2V	PP1V2
6	VOLTAGE=1.2V	PP1V2_NAND_VDDI
20 12	VOLTAGE=1.2V	PP1V2_OSCAR
20	VOLTAGE=1.2V	PP1V2_OSCAR_VDDC
21	VOLTAGE=1.2V	PP1V2_RCAM_CONN
21	VOLTAGE=1.2V	PP1V2_RCAM_SWITCHOUT
21 12 4	VOLTAGE=1.2V	PP1V2_SDRAM
16 12	VOLTAGE=4.3V	PP_VCC_MAIN_UVLO_SENSE
16 12	VOLTAGE=2.8V	PP2V80_THROTTLER
21 11	VOLTAGE=2.85V	PP2V85_CAM_LDO_OUT
16 12	VOLTAGE=2.8V	PP2V80_THROTTLER_FB
17	VOLTAGE=1.8V	PP1V8_MESA_LOAD_SW_OUT
	VOLTAGE=0V	GND

Ref	Voltage	Net
18 16 14 12 11 10 7 6 5 3 2 21 19	VOLTAGE=1.8V	PP1V8
12 3	VOLTAGE=1.8V	PP1V8_ALWAYS
20	VOLTAGE=1.8V	PP1V8_COMP
18	VOLTAGE=1.8V	PP1V8_CUMULUS_VDDLDO
11	VOLTAGE=1.8V	PP1V8_FCAM_CONN
18 12	VOLTAGE=1.8V	PP1V8_GRAPE
19	VOLTAGE=1.8V	PP1V8_LCM_CONN
20 12	VOLTAGE=1.8V	PP1V8_OSCAR
20	VOLTAGE=1.8V	PP1V8_OSCAR_VDDIO
2	VOLTAGE=1.8V	PP1V8_PLL
21	VOLTAGE=1.8V	PP1V8_RCAM_CONN
24 17 16 14 12 10 4 3	VOLTAGE=1.8V	PP1V8_SDRAM
17	VOLTAGE=1.8V	PP1V8_SDRAM_DOCK_CONN
15 12 10	VOLTAGE=1.8V	PP1V8_VA_L19_L67
5	VOLTAGE=1.8V	PP1V8_XTAL
21 12	VOLTAGE=2.5V	PP2V5_RCAM_AF
21 12	VOLTAGE=2.5V	PP2V5_RCAM_AF_COMP
21	VOLTAGE=2.5V	PP2V5_RCAM_AF_CONN
11	VOLTAGE=2.8V	PP2V85_FCAM_CONN
21	VOLTAGE=2.8V	PP2V85_RCAM_CONN
16 12	VOLTAGE=3.0V	PP3V0_ACC
11	VOLTAGE=3.0V	PP3V0_ALS
20	VOLTAGE=3.0V	PP3V0_COMP
20 12	VOLTAGE=3.0V	PP3V0_IMU
12 6	VOLTAGE=3.0V	PP3V0_NAND
17 12	VOLTAGE=3.0V	PP3V0_NAVAJO
17	VOLTAGE=3.0V	PP3V0_NAVAJO_CONN
11	VOLTAGE=3.0V	PP3V0_PROX
12 11	VOLTAGE=3.0V	PP3V0_PROX_ALS
12 11	VOLTAGE=3.0V	PP3V0_PROX_IRLED
16 14 12	VOLTAGE=3.0V	PP3V0_SDRAM
12 2	VOLTAGE=3.3V	PP3V3_USB
22 17	VOLTAGE=5.0V	PP5V0_USB_CONN
17 16 12	VOLTAGE=5.0V	PP5V0_USB_PROT
18 14	VOLTAGE=5.1V	PP5V1_GRAPE_VDDH
19 14	VOLTAGE=5.7V	PP5V7_LCM_AVDDH
19	VOLTAGE=5.7V	PP5V7_LCM_AVDDH_CONN
18 14	VOLTAGE=5.7V	PP5V7_SAGE_AVDDH
14	VOLTAGE=6V	PP6V0_LCM_BOOST
24 22 15 12	VOLTAGE=4.3V	PP_BATT_VCC
15	VOLTAGE=4.3V	PP_BATT_VCC_L19_VP
12	VOLTAGE=4.3V	PP_BUCK0_LX0
12	VOLTAGE=4.3V	PP_BUCK0_LX1
12	VOLTAGE=4.3V	PP_BUCK0_LX2
12	VOLTAGE=4.3V	PP_BUCK0_LX3
12	VOLTAGE=4.3V	PP_BUCK1_LX0
12	VOLTAGE=4.3V	PP_BUCK1_LX1
12	VOLTAGE=4.3V	PP_BUCK2_LX
12	VOLTAGE=4.3V	PP_BUCK3_LX
12	VOLTAGE=4.3V	PP_BUCK4_LX
12	VOLTAGE=4.3V	PP_BUCK5_LX
14	VOLTAGE=-6V	PP_CHESTNUT_CN
14	VOLTAGE=6V	PP_CHESTNUT_CP
14	VOLTAGE=6V	PP_CHESTNUT_LXP
10	VOLTAGE=1.8V	PP_CODEC_FILT+
10	VOLTAGE=2.2V	PP_CODEC_SPKR_VQ
17 10	VOLTAGE=2.7V	PP_CODEC_TO_MIC1_BIAS
17	VOLTAGE=2.7V	PP_CODEC_TO_MIC1_BIAS_CONN
11 10 8	VOLTAGE=2.7V	PP_CODEC_TO_MIC2_3_BIAS
11	VOLTAGE=2.7V	PP_CODEC_TO_MIC3_BIAS_CONN
10	VOLTAGE=2.5V	PP_CODEC_VCPFILT+
10	VOLTAGE=-2.5V	PP_CODEC_VCPFILT-

Ref	Voltage	Net
10	VOLTAGE=0.2V	PP_CODEC_VHP_FLYC
10	VOLTAGE=-2.5V	PP_CODEC_VHP_FLYN
10	VOLTAGE=2.5V	PP_CODEC_VHP_FLYP
18	VOLTAGE=1.6V	PP_CUMULUS_VDDANA
18	VOLTAGE=1.6V	PP_CUMULUS_VDDCORE
17 16	VOLTAGE=4.3V	PP_E75_TO_TRISTAR_ACC1
22 17	VOLTAGE=4.3V	PP_E75_TO_TRISTAR_ACC1_CONN
17 16	VOLTAGE=4.3V	PP_E75_TO_TRISTAR_ACC2
22 17	VOLTAGE=4.3V	PP_E75_TO_TRISTAR_ACC2_CONN
10	VOLTAGE=2.7V	PP_EXTMIC_BIAS
10	VOLTAGE=2.7V	PP_EXTMIC_BIAS_FILT
10	VOLTAGE=2.7V	PP_EXTMIC_BIAS_FILT_IN
10	VOLTAGE=2.7V	PP_EXTMIC_BIAS_IN
15	VOLTAGE=8V	PP_L19_VBOOST
19 14	VOLTAGE=22V	PP_LCM_BL_ANODE
22 19	VOLTAGE=22V	PP_LCM_BL_ANODE_CONN
19 14	VOLTAGE=0.2V	PP_LCM_BL_CAT1
22 19	VOLTAGE=0.2V	PP_LCM_BL_CAT1_CONN
19 14	VOLTAGE=0.2V	PP_LCM_BL_CAT2
22 19	VOLTAGE=0.2V	PP_LCM_BL_CAT2_CONN
24 17	VOLTAGE=2.65V	PP_LDO14_2P65
14 13	VOLTAGE=2.5V	CHESTNUT_TO_PMU_ADCIN7
17 16 13	VOLTAGE=5V	E75_TO_PMU_ACC_DETECT
13	VOLTAGE=5V	E75_TO_PMU_ACC_DETECT_R
22 13	VOLTAGE=5V	PMU_TO_TP_AMUX_AY
22 13	VOLTAGE=5V	PMU_TO_TP_AMUX_BY
13	VOLTAGE=2.5V	FOREHEAD_TO_PMU_NTC_P
13	VOLTAGE=2.5V	CAM_TO_PMU_NTC_P
13	VOLTAGE=2.5V	PA_TO_PMU_NTC_P
13	VOLTAGE=2.5V	H6P_TO_PMU_NTC_P
13	VOLTAGE=2.5V	45_PMU_TCAL
15	VOLTAGE=5V	PP_LED_BOOST_OUT
15	VOLTAGE=5V	PP_LED_DRV_LX
7	VOLTAGE=0.4V	PP_MIPI0D_VREG
7	VOLTAGE=0.4V	PP_MIPI1D_VREG
12 8	VOLTAGE=3.4V	PP_PMU_TO_VIBE
8	VOLTAGE=3.4V	PP_PMU_TO_VIBE_CONN
12	VOLTAGE=5.25V	PP_PMU_VCENTER
13	VOLTAGE=4.3V	PP_PMU_VDD_REF
13	VOLTAGE=2.5V	PP_PMU_VDD_RTC
13	VOLTAGE=1.2V	PP_PMU_VREF
12	VOLTAGE=5.25V	PP_PMU_VSW_CHG
18	VOLTAGE=5.7V	PP_SAGE_LX
18	VOLTAGE=17V	PP_SAGE_LY
18	VOLTAGE=13.5V	PP_SAGE_TO_TOUCH_VCPH
19 18	VOLTAGE=-12V	PP_SAGE_TO_TOUCH_VCPL
18	VOLTAGE=18V	PP_SAGE_VBST_OUTH
18	VOLTAGE=-14V	PP_SAGE_VBST_OUTL
18	VOLTAGE=-12V	PP_SAGE_VCPL_F
15	VOLTAGE=1.8V	PP_SPKAMP_FILT
15	VOLTAGE=1V	PP_SPKAMP_LDO_FILT
15	VOLTAGE=8V	PP_SPKAMP_SW
15 8	VOLTAGE=5V	PP_STRB_DRIVER_TO_LED_COOL
15 8	VOLTAGE=5V	PP_STRB_DRIVER_TO_LED_WARM
24 21 14 13 12 10	VOLTAGE=4.3V	PP_VCC_MAIN
10	VOLTAGE=4.3V	PP_VCC_MAIN_CODEC
14	VOLTAGE=22V	PP_WLED_LX

FOXCONN-RD-EE

SYNC_MASTER=N/A SYNC_DATE=N/A

PAGE TITLE

VOLTAGE NETS

Apple Inc.

DRAWING NUMBER 051-9478 SIZE D

REVISION 8.0.0

BRANCH

NOTICE OF PROPRIETARY PROPERTY:
THE INFORMATION CONTAINED HEREIN IS THE PROPRIETARY PROPERTY OF APPLE INC.
THE POSESSOR AGREES TO THE FOLLOWING:
I TO MAINTAIN THIS DOCUMENT IN CONFIDENCE
II NOT TO REPRODUCE OR COPY IT
III NOT TO REVEAL OR PUBLISH IT IN WHOLE OR PART
IV ALL RIGHTS RESERVED

RADIO_MLB HIERARCHICAL SYMBOL

AP/RADIO INTERFACE

SUBDESIGN_SUFFIX=RF
I616

Signal	Dir	Source	Destination
PP_BATT_VCC	IN	MAKE_BASE=TRUE	PP_BATT_VCC_CONN
PP_VCC_MAIN	IN	MAKE_BASE=TRUE	PP_VCC_MAIN_WLAN
PP1V8_SDRAM	IN	MAKE_BASE=TRUE	PP_WL_BT_VDDIO_AP
PP_LDO14_2P65	OUT	MAKE_BASE=TRUE	PP_LDO14_2V65
AP_TO_RADIO_ON_L	IN	MAKE_BASE=TRUE	RADIO_ON_L
BB_TO_AP_RESET_DET_L	OUT	MAKE_BASE=TRUE	RESET_DET_L
PMU_TO_BB_RST_L	IN	MAKE_BASE=TRUE	RESET_PMU_L
AP_TO_BB_RST_L	IN	MAKE_BASE=TRUE	BB_RST_L
RESET_1V8_L	OUT	MAKE_BASE=TRUE	RF_RESET_L
45_PMU_TO_WLAN_CLK32K	IN	MAKE_BASE=TRUE	CLK32K_AP
BB_TO_LEDDRV_GSM_BLANK	OUT	MAKE_BASE=TRUE	TX_GTR_THRESH
90_TRISTAR_BI_BB_USB_N	BI	MAKE_BASE=TRUE	90_BB_USB_D_N
90_TRISTAR_BI_BB_USB_P	BI	MAKE_BASE=TRUE	90_BB_USB_D_P
PMU_TO_BB_VBUS_DET	IN	MAKE_BASE=TRUE	BB_USB_VBUS
AP_TO_BB_UART4_RTS_L	IN	MAKE_BASE=TRUE	BB_UART_CTS_L
BB_TO_AP_UART4_CTS_L	OUT	MAKE_BASE=TRUE	BB_UART_RTS_L
AP_TO_BB_UART4_TXD	IN	MAKE_BASE=TRUE	BB_UART_RXD
BB_TO_AP_UART4_RXD	OUT	MAKE_BASE=TRUE	BB_UART_TXD
BB_TO_PMU_HOST_WAKE	OUT	MAKE_BASE=TRUE	HOST_WAKE_BB
BB_TO_AP_PP_SYNC	OUT	MAKE_BASE=TRUE	PP_SYNC
45_AP_TO_BB_I2S1_BCLK	IN	MAKE_BASE=TRUE	BB_I2S_CLK
AP_TO_BB_I2S1_DOUT	IN	MAKE_BASE=TRUE	BB_I2S_RXD
BB_TO_AP_I2S1_DIN	OUT	MAKE_BASE=TRUE	BB_I2S_TXD
AP_TO_BB_I2S1_LRCLK	IN	MAKE_BASE=TRUE	BB_I2S_WS
RADIO_TO_PMU_ADC_SMPS1_MSMC_1V05	OUT	MAKE_BASE=TRUE	ADC_SMPS1_MSMC_1V05
RADIO_TO_PMU_ADC_SMPS3_MSME_1V8	OUT	MAKE_BASE=TRUE	ADC_SMPS3_MSME_1V8
RADIO_TO_PMU_ADC_LDO6_RUIM_1V8	OUT	MAKE_BASE=TRUE	ADC_LDO6_RUIM_1V8
RADIO_TO_PMU_ADC_LVS1	OUT	MAKE_BASE=TRUE	ADC_LVS1
PMU_TO_WLAN_REG_ON	IN	MAKE_BASE=TRUE	WLAN_REG_ON
AP_TO_WLAN_UART3_TXD	IN	MAKE_BASE=TRUE	WLAN_UART_RXD
WLAN_TO_AP_UART3_RXD	OUT	MAKE_BASE=TRUE	WLAN_UART_TXD
WLAN_TO_PMU_HOST_WAKE	OUT	MAKE_BASE=TRUE	HOST_WAKE_WLAN
PMU_TO_BT_REG_ON	IN	MAKE_BASE=TRUE	BT_REG_ON
AP_TO_BT_UART1_RTS_L	IN	MAKE_BASE=TRUE	BT_UART_CTS_L
BT_TO_AP_UART1_CTS_L	OUT	MAKE_BASE=TRUE	BT_UART_RTS_L
AP_TO_BT_UART1_TXD	IN	MAKE_BASE=TRUE	BT_UART_RXD
BT_TO_AP_UART1_RXD	OUT	MAKE_BASE=TRUE	BT_UART_TXD
AP_TO_BT_WAKE	IN	MAKE_BASE=TRUE	BT_WAKE
BT_TO_PMU_HOST_WAKE	OUT	MAKE_BASE=TRUE	HOST_WAKE_BT
45_AP_TO_BT_I2S3_BCLK	BI	MAKE_BASE=TRUE	BT_PCM_CLK
AP_TO_BT_I2S3_DOUT	BI	MAKE_BASE=TRUE	BT_PCM_IN
BT_TO_AP_I2S3_DIN	BI	MAKE_BASE=TRUE	BT_PCM_OUT
AP_TO_BT_I2S3_LRCLK	BI	MAKE_BASE=TRUE	BT_PCM_SYNC
50_AP_BI_BB_HSIC1_DATA	BI	MAKE_BASE=TRUE	50_HSIC_BB_DATA
50_AP_BI_BB_HSIC1_STB	BI	MAKE_BASE=TRUE	50_HSIC_BB_STROBE
AP_TO_BB_HSIC1_RDY	IN	MAKE_BASE=TRUE	AP_HSIC1_RDY
BB_TO_AP_HSIC1_RDY	OUT	MAKE_BASE=TRUE	PBL_RUN_BB_HSIC1_RDY
BB_TO_AP_HSIC1_REMOTE_WAKE	BI	MAKE_BASE=TRUE	BB_HSIC1_REMOTE_WAKE
AP_TO_BB_WAKE_MODEM	IN	MAKE_BASE=TRUE	AP_WAKE_MODEM
50_AP_BI_WLAN_HSIC2_DATA	BI	MAKE_BASE=TRUE	50_HSIC_WLAN_DATA
50_AP_BI_WLAN_HSIC2_STB	BI	MAKE_BASE=TRUE	50_HSIC_WLAN_STROBE
AP_TO_WLAN_HSIC2_RDY	OUT	MAKE_BASE=TRUE	AP_HSIC3_RDY
WLAN_TO_AP_HSIC2_RDY	OUT	MAKE_BASE=TRUE	WLAN_HSIC3_DEVICE_RDY
WLAN_TO_AP_HSIC2_REMOTE_WAKE	BI	MAKE_BASE=TRUE	WLAN_HSIC3_RESUME
BB_TO_LAT_SW1_CTL	OUT	MAKE_BASE=TRUE	LAT_SW1_CTL
BB_TO_LAT_SW2_CTL	OUT	MAKE_BASE=TRUE	LAT_SW2_CTL
<OUT> BB_TO_LAT_SW3_CTL			
BB_TO_ANTENNA_PAC_SPI_CS	OUT	MAKE_BASE=TRUE	BB_SPI_TO_PAC_CS
BB_TO_ANTENNA_PAC_SPI_SCLK	OUT	MAKE_BASE=TRUE	BB_SPI_TO_PAC_CLK
BB_TO_ANTENNA_PAC_SPI_MOSI	OUT	MAKE_BASE=TRUE	BB_SPI_TO_PAC_DATA_MOSI
NOTE: ANTENNA_PAC_TO_BB_SPI_MISO DOES NOT COME TO SINGLE_BRD MLB			PAC_TO_BB_SPI_DATA_MISO
BB_TO_AP_IPC_GPIO	BI	MAKE_BASE=TRUE	BB_IPC_GPIO
OSCAR_TO_RADIO_CONTEXT_A	IN	MAKE_BASE=TRUE	OSCAR_CONTEXT_A
OSCAR_TO_RADIO_CONTEXT_B	IN	MAKE_BASE=TRUE	OSCAR_CONTEXT_B
BB_JTAG_TCK	BI	MAKE_BASE=TRUE	AP_TO_BB_JTAG_TCK
BB_JTAG_TDI	BI	MAKE_BASE=TRUE	AP_TO_BB_JTAG_TDI
BB_JTAG_TMS	BI	MAKE_BASE=TRUE	AP_TO_BB_JTAG_TMS
BB_JTAG_TRST_L	BI	MAKE_BASE=TRUE	AP_TO_BB_JTAG_TRST_L
BB_JTAG_TDO	BI	MAKE_BASE=TRUE	BB_TO_AP_JTAG_TDO

RF BOARD_ID BOM OPTIONS

PART#	QTY	DESCRIPTION	REFERENCE DESIGNATOR(S)	CRITICAL	BOM OPTION
118S0621	1	1.00M 1% 01005	R25_RF	CRITICAL	N51_ALL
118S0732	1	50K 1% 01005	R26_RF	CRITICAL	N51_ALL
117S0159	1	470K 5% 01005	R25_RF	CRITICAL	N51_DTD
118S0626	1	100K 1% 01005	R26_RF	CRITICAL	N51_DTD
118S0626	1	100K 1% 01005	R25_RF	CRITICAL	N53_ALL
118S0726	1	162K 1% 01005	R26_RF	CRITICAL	N53_ALL
118S0626	1	100K 1% 01005	R25_RF	CRITICAL	N53_DTD
118S0623	1	267K 1% 01005	R26_RF	CRITICAL	N53_DTD

CONFIDENTIAL

SYNC_MASTER=N/A SYNC_DATE=N/A

PAGE TITLE
RADIO_MLB HIERARCH. SYMBOL

Apple Inc.

DRAWING NUMBER 051-9478 SIZE D
REVISION 8.0.0
BRANCH
PAGE 24 OF 25
SHEET 24 OF 56

NOTICE OF PROPRIETARY PROPERTY:
THE INFORMATION CONTAINED HEREIN IS THE PROPRIETARY PROPERTY OF APPLE INC.
THE POSESSOR AGREES TO THE FOLLOWING:
I TO MAINTAIN THIS DOCUMENT IN CONFIDENCE
II NOT TO REPRODUCE OR COPY IT
III NOT TO REVEAL OR PUBLISH IT IN WHOLE OR PART
IV ALL RIGHTS RESERVED

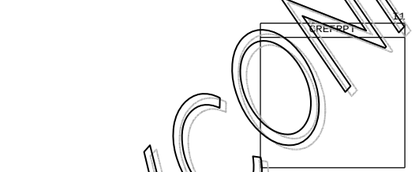

FoxCONN-RD-EE

Title: Basenet Report
Design: single_brd
Date: Feb 6 20:18:49 2013

Base nets and synonyms for
single_brd_lib.SINGLE_BRD(@single_brd_lib.single_brd(sch_1))

Base Signal	Synonyms	Location([Zone][dir])
45_AMBER_VSS_RTC	45_AMBER_VSS_RTC - @single_brd_lib.SINGLE_BRD	12A7
45_AP_BI_NAND_ANC0_DQS	45_AP_BI_NAND_ANC0_DQS - @single_brd_lib.SINGLE_BRD	6A7 6B8 6C2
45_AP_BI_NAND_ANC1_DQS	45_AP_BI_NAND_ANC1_DQS - @single_brd_lib.SINGLE_BRD	6B3 6B6
45_AP_PPN0_ZQ	45_AP_PPN0_ZQ - @single_brd_lib.SINGLE_BRD	6B8
45_AP_PPN1_ZQ	45_AP_PPN1_ZQ - @single_brd_lib.SINGLE_BRD	6B6
45_AP_TO_BB_I2S1_BCLK	45_AP_TO_BB_I2S1_BCLK - @single_brd_lib.SINGLE_BRD	3C4 24C6
	BB_I2S_CLK - @single_brd_lib.RADIO_MLB(i616_page 24)	35B5 35C8 39B4
45_AP_TO_BT_I2S3_BCLK	45_AP_TO_BT_I2S3_BCLK - @single_brd_lib.SINGLE_BRD	3C4 24B6
	BT_PCM_CLK - @single_brd_lib.RADIO_MLB(i616_page 24)	35B8 56B3
45_AP_TO_CODEC_ASP_I2S0_BCLK	45_AP_TO_CODEC_ASP_I2S0_BCLK - @single_brd_lib.SINGLE_BRD	3D4 10D3
45_AP_TO_CODEC_I2S_MCLK	45_AP_TO_CODEC_I2S_MCLK - @single_brd_lib.SINGLE_BRD	3D5 10D3
45_AP_TO_CODEC_I2S_MCLK_R	45_AP_TO_CODEC_I2S_MCLK_R - @single_brd_lib.SINGLE_BRD	3D4
45_AP_TO_CODEC_VSP_I2S4_BCLK	45_AP_TO_CODEC_VSP_I2S4_BCLK - @single_brd_lib.SINGLE_BRD	3C4 10C3
45_AP_TO_CODEC_XSP_I2S2_BCLK	45_AP_TO_CODEC_XSP_I2S2_BCLK - @single_brd_lib.SINGLE_BRD	3C4 10C3 15C6
45_AP_TO_FCAM_CLK	45_AP_TO_FCAM_CLK - @single_brd_lib.SINGLE_BRD	7B4 11D8
45_AP_TO_FCAM_CLK_CONN	45_AP_TO_FCAM_CLK_CONN - @single_brd_lib.SINGLE_BRD	11D6
45_AP_TO_FCAM_CLK_R	45_AP_TO_FCAM_CLK_R - @single_brd_lib.SINGLE_BRD	7C6
45_AP_TO_NAND_ANC0_RE_L	45_AP_TO_NAND_ANC0_RE_L - @single_brd_lib.SINGLE_BRD	6A7 6B8 6C2
45_AP_TO_NAND_ANC1_RE_L	45_AP_TO_NAND_ANC1_RE_L - @single_brd_lib.SINGLE_BRD	6B3 6B6
45_AP_TO_PMU_DWI_CLK	45_AP_TO_PMU_DWI_CLK - @single_brd_lib.SINGLE_BRD	3C2 13B7 14B6
45_AP_TO_PMU_DWI_CLK_XW	45_AP_TO_PMU_DWI_CLK_XW - @single_brd_lib.SINGLE_BRD	13B6
45_AP_TO_PMU_DWI_DO	45_AP_TO_PMU_DWI_DO - @single_brd_lib.SINGLE_BRD	3C2 13B7 14B6
45_AP_TO_PMU_DWI_DO_XW	45_AP_TO_PMU_DWI_DO_XW - @single_brd_lib.SINGLE_BRD	13B6
45_AP_TO_RCAM_CLK	45_AP_TO_RCAM_CLK - @single_brd_lib.SINGLE_BRD	7C4 21A7
45_AP_TO_RCAM_CLK_CONN	45_AP_TO_RCAM_CLK_CONN - @single_brd_lib.SINGLE_BRD	21B4
45_AP_TO_RCAM_CLK_R	45_AP_TO_RCAM_CLK_R - @single_brd_lib.SINGLE_BRD	7C6
45_AP_TO_SPKAMP_I2S2_MCLK	45_AP_TO_SPKAMP_I2S2_MCLK - @single_brd_lib.SINGLE_BRD	3C5 15C6
45_AP_TO_SPKAMP_I2S2_MCLK_R	45_AP_TO_SPKAMP_I2S2_MCLK_R - @single_brd_lib.SINGLE_BRD	3C4
45_AP_TO_TOUCH_CLK32K_RESET_L	45_AP_TO_TOUCH_CLK32K_RESET_L - @single_brd_lib.SINGLE_BRD	3C5 18B8
45_AP_TO_TOUCH_CLK32K_RESET_L_XW	45_AP_TO_TOUCH_CLK32K_RESET_L_XW - @single_brd_lib.SINGLE_BRD	18B7
45_BUCK0_FB	45_BUCK0_FB - @single_brd_lib.SINGLE_BRD	4A3 12D4
45_BUCK1_FB	45_BUCK1_FB - @single_brd_lib.SINGLE_BRD	4A1 12C4
45_BUCK2_FB	45_BUCK2_FB - @single_brd_lib.SINGLE_BRD	4A5 12C4
45_BUCK3_FB	45_BUCK3_FB - @single_brd_lib.SINGLE_BRD	12B5
45_BUCK4_FB	45_BUCK4_FB - @single_brd_lib.SINGLE_BRD	12B5
45_BUCK5_FB	45_BUCK5_FB - @single_brd_lib.SINGLE_BRD	12B5
45_DDR0_VREF_CA	45_DDR0_VREF_CA - @single_brd_lib.SINGLE_BRD	4A7 4D8
45_DDR0_VREF_DQ	45_DDR0_VREF_DQ - @single_brd_lib.SINGLE_BRD	4A5 4D8
45_DDR0_ZQ	45_DDR0_ZQ - @single_brd_lib.SINGLE_BRD	4D8
45_DDR1_VREF_CA	45_DDR1_VREF_CA - @single_brd_lib.SINGLE_BRD	4A6 4D8
45_DDR1_VREF_DQ	45_DDR1_VREF_DQ - @single_brd_lib.SINGLE_BRD	4A4 4D8
45_DDR1_ZQ	45_DDR1_ZQ - @single_brd_lib.SINGLE_BRD	4D8
45_NAND_PPN_ZQ	45_NAND_PPN_ZQ - @single_brd_lib.SINGLE_BRD	6B3
45_PMU_IREF	45_PMU_IREF - @single_brd_lib.SINGLE_BRD	13C4
45_PMU_TCAL	45_PMU_TCAL - @single_brd_lib.SINGLE_BRD	13B6 23C2
45_PMU_TO_OSCAR_CLK32K	45_PMU_TO_OSCAR_CLK32K - @single_brd_lib.SINGLE_BRD	13B4 20C5
45_PMU_TO_WLAN_CLK32K	45_PMU_TO_WLAN_CLK32K - @single_brd_lib.SINGLE_BRD	13B4 13C6 24D6
	CLK32K_AP - @single_brd_lib.RADIO_MLB(i616_page 24)	35C6 35C8 56C7
45_PMU_TO_XTAL_OSC32	45_PMU_TO_XTAL_OSC32 - @single_brd_lib.SINGLE_BRD	12A7
45_PMU_VPUMP	45_PMU_VPUMP - @single_brd_lib.SINGLE_BRD	12A5 23B7
45_PROX_TO_CUMULUS_RX	45_PROX_TO_CUMULUS_RX - @single_brd_lib.SINGLE_BRD	11C8 18C8
45_PROX_TO_CUMULUS_RX_CONN	45_PROX_TO_CUMULUS_RX_CONN - @single_brd_lib.SINGLE_BRD	11C6
45_PROX_TO_CUMULUS_RX_FILT	45_PROX_TO_CUMULUS_RX_FILT - @single_brd_lib.SINGLE_BRD	18C8
45_PROX_TO_CUMULUS_RX_IN	45_PROX_TO_CUMULUS_RX_IN - @single_brd_lib.SINGLE_BRD	18B7
45_XTAL_24M_GND	45_XTAL_24M_GND - @single_brd_lib.SINGLE_BRD	2C2
45_XTAL_24M_I	45_XTAL_24M_I - @single_brd_lib.SINGLE_BRD	2C4
45_XTAL_24M_O	45_XTAL_24M_O - @single_brd_lib.SINGLE_BRD	2C4
45_XTAL_24M_O_R	45_XTAL_24M_O_R - @single_brd_lib.SINGLE_BRD	2C2
45_XTAL_TO_PMU_OSC32	45_XTAL_TO_PMU_OSC32 - @single_brd_lib.SINGLE_BRD	12A7
50_AP_BI_BB_HSIC1_DATA	50_AP_BI_BB_HSIC1_DATA - @single_brd_lib.SINGLE_BRD	2B6 24B6
	50_HSIC_BB_DATA - @single_brd_lib.RADIO_MLB(i616_page 24)	35B1 35B6 35C8 38B3
50_AP_BI_BB_HSIC1_STB	50_AP_BI_BB_HSIC1_STB - @single_brd_lib.SINGLE_BRD	2B6 24B6
	50_HSIC_BB_STROBE - @single_brd_lib.RADIO_MLB(i616_page 24)	35B1 35B6 35C8 38B3
50_AP_BI_WLAN_HSIC2_DATA	50_AP_BI_WLAN_HSIC2_DATA - @single_brd_lib.SINGLE_BRD	2B6 24B6
	50_HSIC_WLAN_DATA - @single_brd_lib.RADIO_MLB(i616_page 24)	35B6 35C8 56B6
50_AP_BI_WLAN_HSIC2_STB	50_AP_BI_WLAN_HSIC2_STB - @single_brd_lib.SINGLE_BRD	2B6 24B6
	50_HSIC_WLAN_STROBE - @single_brd_lib.RADIO_MLB(i616_page 24)	35B6 35C8 56B6
90_AP_BI_LCM_MIPI_DATA0_CONN_N	90_AP_BI_LCM_MIPI_DATA0_CONN_N - @single_brd_lib.SINGLE_BRD	19C6
90_AP_BI_LCM_MIPI_DATA0_CONN_P	90_AP_BI_LCM_MIPI_DATA0_CONN_P - @single_brd_lib.SINGLE_BRD	19C6
90_AP_BI_LCM_MIPI_DATA0_N	90_AP_BI_LCM_MIPI_DATA0_N - @single_brd_lib.SINGLE_BRD	7B8 19C7
90_AP_BI_LCM_MIPI_DATA0_P	90_AP_BI_LCM_MIPI_DATA0_P - @single_brd_lib.SINGLE_BRD	7B8 19C7
90_AP_BI_TRISTAR_USB0_H6P_N	90_AP_BI_TRISTAR_USB0_H6P_N - @single_brd_lib.SINGLE_BRD	2B4
90_AP_BI_TRISTAR_USB0_H6P_P	90_AP_BI_TRISTAR_USB0_H6P_P - @single_brd_lib.SINGLE_BRD	2B4
90_AP_BI_TRISTAR_USB0_N	90_AP_BI_TRISTAR_USB0_N - @single_brd_lib.SINGLE_BRD	2B2 16C4
90_AP_BI_TRISTAR_USB0_P	90_AP_BI_TRISTAR_USB0_P - @single_brd_lib.SINGLE_BRD	2B2 16C4
90_AP_TO_LCM_MIPI_CLK_CONN_N	90_AP_TO_LCM_MIPI_CLK_CONN_N - @single_brd_lib.SINGLE_BRD	19C6
90_AP_TO_LCM_MIPI_CLK_CONN_P	90_AP_TO_LCM_MIPI_CLK_CONN_P - @single_brd_lib.SINGLE_BRD	19C6
90_AP_TO_LCM_MIPI_CLK_N	90_AP_TO_LCM_MIPI_CLK_N - @single_brd_lib.SINGLE_BRD	7B8 19C7
90_AP_TO_LCM_MIPI_CLK_P	90_AP_TO_LCM_MIPI_CLK_P - @single_brd_lib.SINGLE_BRD	7B8 19C7
90_AP_TO_LCM_MIPI_DATA1_CONN_N	90_AP_TO_LCM_MIPI_DATA1_CONN_N - @single_brd_lib.SINGLE_BRD	19C6
90_AP_TO_LCM_MIPI_DATA1_CONN_P	90_AP_TO_LCM_MIPI_DATA1_CONN_P - @single_brd_lib.SINGLE_BRD	19C6
90_AP_TO_LCM_MIPI_DATA1_N	90_AP_TO_LCM_MIPI_DATA1_N - @single_brd_lib.SINGLE_BRD	7B8 19C7
90_AP_TO_LCM_MIPI_DATA1_P	90_AP_TO_LCM_MIPI_DATA1_P - @single_brd_lib.SINGLE_BRD	7B8 19C7
90_CODEC_BI_TRISTAR_MIKEYBUS_DIG_N	90_CODEC_BI_TRISTAR_MIKEYBUS_DIG_N - @single_brd_lib.SINGLE_BRD	16D5 23C7
90_CODEC_BI_TRISTAR_MIKEYBUS_DIG_P	90_CODEC_BI_TRISTAR_MIKEYBUS_DIG_P - @single_brd_lib.SINGLE_BRD	16D5 23C7
90_CODEC_BI_TRISTAR_MIKEYBUS_L67_N	90_CODEC_BI_TRISTAR_MIKEYBUS_L67_N - @single_brd_lib.SINGLE_BRD	9B4 23C7
90_CODEC_BI_TRISTAR_MIKEYBUS_L67_P	90_CODEC_BI_TRISTAR_MIKEYBUS_L67_P - @single_brd_lib.SINGLE_BRD	9B4 23C7
90_CODEC_BI_TRISTAR_MIKEYBUS_N	90_CODEC_BI_TRISTAR_MIKEYBUS_N - @single_brd_lib.SINGLE_BRD	9B1 16D6 23C7
90_CODEC_BI_TRISTAR_MIKEYBUS_P	90_CODEC_BI_TRISTAR_MIKEYBUS_P - @single_brd_lib.SINGLE_BRD	9B1 16D6 23C7
90_FCAM_TO_AP_MIPI_CLK_CONN_N	90_FCAM_TO_AP_MIPI_CLK_CONN_N - @single_brd_lib.SINGLE_BRD	11C4
90_FCAM_TO_AP_MIPI_CLK_CONN_P	90_FCAM_TO_AP_MIPI_CLK_CONN_P - @single_brd_lib.SINGLE_BRD	11C4
90_FCAM_TO_AP_MIPI_CLK_N	90_FCAM_TO_AP_MIPI_CLK_N - @single_brd_lib.SINGLE_BRD	7B5 11D1
90_FCAM_TO_AP_MIPI_CLK_P	90_FCAM_TO_AP_MIPI_CLK_P - @single_brd_lib.SINGLE_BRD	7B5 11D1
90_FCAM_TO_AP_MIPI_DATA0_CONN_N	90_FCAM_TO_AP_MIPI_DATA0_CONN_N - @single_brd_lib.SINGLE_BRD	11C4
90_FCAM_TO_AP_MIPI_DATA0_CONN_P	90_FCAM_TO_AP_MIPI_DATA0_CONN_P - @single_brd_lib.SINGLE_BRD	11C4
90_FCAM_TO_AP_MIPI_DATA0_N	90_FCAM_TO_AP_MIPI_DATA0_N - @single_brd_lib.SINGLE_BRD	7B5 11D1
90_FCAM_TO_AP_MIPI_DATA0_P	90_FCAM_TO_AP_MIPI_DATA0_P - @single_brd_lib.SINGLE_BRD	7B5 11D1
90_RCAM_TO_AP_MIPI_CLK_CONN_N	90_RCAM_TO_AP_MIPI_CLK_CONN_N - @single_brd_lib.SINGLE_BRD	21B3
90_RCAM_TO_AP_MIPI_CLK_CONN_P	90_RCAM_TO_AP_MIPI_CLK_CONN_P - @single_brd_lib.SINGLE_BRD	21B3
90_RCAM_TO_AP_MIPI_CLK_N	90_RCAM_TO_AP_MIPI_CLK_N - @single_brd_lib.SINGLE_BRD	7C8 21B1
90_RCAM_TO_AP_MIPI_CLK_P	90_RCAM_TO_AP_MIPI_CLK_P - @single_brd_lib.SINGLE_BRD	7C8 21B1
90_RCAM_TO_AP_MIPI_DATA0_CONN_N	90_RCAM_TO_AP_MIPI_DATA0_CONN_N - @single_brd_lib.SINGLE_BRD	21B3
90_RCAM_TO_AP_MIPI_DATA0_CONN_P	90_RCAM_TO_AP_MIPI_DATA0_CONN_P - @single_brd_lib.SINGLE_BRD	21B3
90_RCAM_TO_AP_MIPI_DATA0_N	90_RCAM_TO_AP_MIPI_DATA0_N - @single_brd_lib.SINGLE_BRD	7C8 21B1
90_RCAM_TO_AP_MIPI_DATA0_P	90_RCAM_TO_AP_MIPI_DATA0_P - @single_brd_lib.SINGLE_BRD	7C8 21B1
90_RCAM_TO_AP_MIPI_DATA1_CONN_N	90_RCAM_TO_AP_MIPI_DATA1_CONN_N - @single_brd_lib.SINGLE_BRD	21B3
90_RCAM_TO_AP_MIPI_DATA1_CONN_P	90_RCAM_TO_AP_MIPI_DATA1_CONN_P - @single_brd_lib.SINGLE_BRD	21B3
90_RCAM_TO_AP_MIPI_DATA1_N	90_RCAM_TO_AP_MIPI_DATA1_N - @single_brd_lib.SINGLE_BRD	7C8 21B1
90_RCAM_TO_AP_MIPI_DATA1_P	90_RCAM_TO_AP_MIPI_DATA1_P - @single_brd_lib.SINGLE_BRD	7C8 21B1
90_RCAM_TO_AP_MIPI_DATA2_CONN_N	90_RCAM_TO_AP_MIPI_DATA2_CONN_N - @single_brd_lib.SINGLE_BRD	21C3
90_RCAM_TO_AP_MIPI_DATA2_CONN_P	90_RCAM_TO_AP_MIPI_DATA2_CONN_P - @single_brd_lib.SINGLE_BRD	21C3
90_RCAM_TO_AP_MIPI_DATA2_N	90_RCAM_TO_AP_MIPI_DATA2_N - @single_brd_lib.SINGLE_BRD	7C8 21C1
90_RCAM_TO_AP_MIPI_DATA2_P	90_RCAM_TO_AP_MIPI_DATA2_P - @single_brd_lib.SINGLE_BRD	7C8 21C1
90_RCAM_TO_AP_MIPI_DATA3_CONN_N	90_RCAM_TO_AP_MIPI_DATA3_CONN_N - @single_brd_lib.SINGLE_BRD	21C3
90_RCAM_TO_AP_MIPI_DATA3_CONN_P	90_RCAM_TO_AP_MIPI_DATA3_CONN_P - @single_brd_lib.SINGLE_BRD	21C3
90_RCAM_TO_AP_MIPI_DATA3_N	90_RCAM_TO_AP_MIPI_DATA3_N - @single_brd_lib.SINGLE_BRD	7C8 21C1
90_RCAM_TO_AP_MIPI_DATA3_P	90_RCAM_TO_AP_MIPI_DATA3_P - @single_brd_lib.SINGLE_BRD	7C8 21C1
90_TRISTAR_BI_BB_USB_N	90_TRISTAR_BI_BB_USB_N - @single_brd_lib.SINGLE_BRD	16C4 24C6
	90_BB_USB_D_N - @single_brd_lib.RADIO_MLB(i616_page 24)	35C3 35C8 38A5
90_TRISTAR_BI_BB_USB_P	90_TRISTAR_BI_BB_USB_P - @single_brd_lib.SINGLE_BRD	16D4 24C6
	90_BB_USB_D_P - @single_brd_lib.RADIO_MLB(i616_page 24)	35C3 35C8 38A5
90_TRISTAR_BI_E75_PAIR1_CONN_N	90_TRISTAR_BI_E75_PAIR1_CONN_N - @single_brd_lib.SINGLE_BRD	16C2 17B1 22D3 23D5
90_TRISTAR_BI_E75_PAIR1_CONN_P	90_TRISTAR_BI_E75_PAIR1_CONN_P - @single_brd_lib.SINGLE_BRD	16C2 17B1 22D3 23D5
90_TRISTAR_BI_E75_PAIR2_CONN_N	90_TRISTAR_BI_E75_PAIR2_CONN_N - @single_brd_lib.SINGLE_BRD	16C2 17B1 22C3 23D5
90_TRISTAR_BI_E75_PAIR2_CONN_P	90_TRISTAR_BI_E75_PAIR2_CONN_P - @single_brd_lib.SINGLE_BRD	16C2 17B1 22D3 23D5
ACCEL_TO_OSCAR_INT1	ACCEL_TO_OSCAR_INT1 - @single_brd_lib.SINGLE_BRD	20B3 20D7
ACCEL_TO_OSCAR_INT2	ACCEL_TO_OSCAR_INT2 - @single_brd_lib.SINGLE_BRD	20B3 20C7
ALS_TO_AP_INT_CONN_L	ALS_TO_AP_INT_CONN_L - @single_brd_lib.SINGLE_BRD	11C5
ALS_TO_AP_INT_L	ALS_TO_AP_INT_L - @single_brd_lib.SINGLE_BRD	3C5 11B7
AP_BI_BATTERY_SWI	AP_BI_BATTERY_SWI - @single_brd_lib.SINGLE_BRD	3B5 18B4 22D8
AP_BI_BATTERY_SWI_CONN	AP_BI_BATTERY_SWI_CONN - @single_brd_lib.SINGLE_BRD	22D7 22D8
AP_BI_EEPROM_I2C_SDA	AP_BI_EEPROM_I2C_SDA - @single_brd_lib.SINGLE_BRD	3C2 16A6
AP_BI_FCAM_I2C_SDA	AP_BI_FCAM_I2C_SDA - @single_brd_lib.SINGLE_BRD	7C4 11C7
AP_BI_FCAM_SDA_CONN	AP_BI_FCAM_SDA_CONN - @single_brd_lib.SINGLE_BRD	11D6
AP_BI_I2C0_SDA	AP_BI_I2C0_SDA - @single_brd_lib.SINGLE_BRD	3D1 13B6 14B7 14C6 15C6 16C2
AP_BI_I2C1_SDA	AP_BI_I2C1_SDA - @single_brd_lib.SINGLE_BRD	3D1 11B8
AP_BI_I2C1_SDA_ALS_CONN	AP_BI_I2C1_SDA_ALS_CONN - @single_brd_lib.SINGLE_BRD	11C5
AP_BI_NAND_ANC0_IO<0>	AP_BI_NAND_ANC0_IO<0> - @single_brd_lib.SINGLE_BRD	6C5 6C8
AP_BI_NAND_ANC0_IO<1>	AP_BI_NAND_ANC0_IO<1> - @single_brd_lib.SINGLE_BRD	6C5 6C8
AP_BI_NAND_ANC0_IO<2>	AP_BI_NAND_ANC0_IO<2> - @single_brd_lib.SINGLE_BRD	6C5 6C8
AP_BI_NAND_ANC0_IO<3>	AP_BI_NAND_ANC0_IO<3> - @single_brd_lib.SINGLE_BRD	6C5 6C8
AP_BI_NAND_ANC0_IO<4>	AP_BI_NAND_ANC0_IO<4> - @single_brd_lib.SINGLE_BRD	6C5 6C8
AP_BI_NAND_ANC0_IO<5>	AP_BI_NAND_ANC0_IO<5> - @single_brd_lib.SINGLE_BRD	6C5 6C8
AP_BI_NAND_ANC0_IO<6>	AP_BI_NAND_ANC0_IO<6> - @single_brd_lib.SINGLE_BRD	6B7 6C5 6C8
AP_BI_NAND_ANC0_IO<7>	AP_BI_NAND_ANC0_IO<7> - @single_brd_lib.SINGLE_BRD	6C5 6C8
AP_BI_NAND_ANC1_IO<0>	AP_BI_NAND_ANC1_IO<0> - @single_brd_lib.SINGLE_BRD	6C5
AP_BI_NAND_ANC1_IO<1>	AP_BI_NAND_ANC1_IO<1> - @single_brd_lib.SINGLE_BRD	6C5
AP_BI_NAND_ANC1_IO<2>	AP_BI_NAND_ANC1_IO<2> - @single_brd_lib.SINGLE_BRD	6C5
AP_BI_NAND_ANC1_IO<3>	AP_BI_NAND_ANC1_IO<3> - @single_brd_lib.SINGLE_BRD	6C5
AP_BI_NAND_ANC1_IO<4>	AP_BI_NAND_ANC1_IO<4> - @single_brd_lib.SINGLE_BRD	6C5
AP_BI_NAND_ANC1_IO<5>	AP_BI_NAND_ANC1_IO<5> - @single_brd_lib.SINGLE_BRD	6C5
AP_BI_NAND_ANC1_IO<6>	AP_BI_NAND_ANC1_IO<6> - @single_brd_lib.SINGLE_BRD	6C5
AP_BI_NAND_ANC1_IO<7>	AP_BI_NAND_ANC1_IO<7> - @single_brd_lib.SINGLE_BRD	6C5
AP_BI_OSCAR_SWDIO_1V8	AP_BI_OSCAR_SWDIO_1V8 - @single_brd_lib.SINGLE_BRD	3C2 20C5
AP_BI_RCAM_I2C_SDA	AP_BI_RCAM_I2C_SDA - @single_brd_lib.SINGLE_BRD	7C4 15A6 20C7 21B7
AP_BI_RCAM_I2C_SDA_CONN	AP_BI_RCAM_I2C_SDA_CONN - @single_brd_lib.SINGLE_BRD	21C4
AP_TO_BB_HSIC1_RDY	AP_TO_BB_HSIC1_RDY - @single_brd_lib.SINGLE_BRD	3C2 24B6
	AP_HSIC1_RDY - @single_brd_lib.RADIO_MLB(i616_page 24)	35C1 35C8 39B2
AP_TO_BB_I2S1_DOUT	AP_TO_BB_I2S1_DOUT - @single_brd_lib.SINGLE_BRD	3C4 24C6
	BB_I2S_RXD - @single_brd_lib.RADIO_MLB(i616_page 24)	35B5 35C8 39B4
AP_TO_BB_I2S1_LRCLK	AP_TO_BB_I2S1_LRCLK - @single_brd_lib.SINGLE_BRD	3C4 24C6
	BB_I2S_WS - @single_brd_lib.RADIO_MLB(i616_page 24)	35B5 35C8 39B4
AP_TO_BB_JTAG_TCK	AP_TO_BB_JTAG_TCK - @single_brd_lib.SINGLE_BRD	3B7 24D3
	BB_JTAG_TCK - @single_brd_lib.RADIO_MLB(i616_page 24)	35B8 35C3 38B5
AP_TO_BB_JTAG_TDI	AP_TO_BB_JTAG_TDI - @single_brd_lib.SINGLE_BRD	3C7 24D3
	BB_JTAG_TDI - @single_brd_lib.RADIO_MLB(i616_page 24)	35B8 35C3 38B5
AP_TO_BB_JTAG_TMS	AP_TO_BB_JTAG_TMS - @single_brd_lib.SINGLE_BRD	3B7 24D3
	BB_JTAG_TMS - @single_brd_lib.RADIO_MLB(i616_page 24)	35B8 35C3 38B5
AP_TO_BB_JTAG_TRST_L	AP_TO_BB_JTAG_TRST_L - @single_brd_lib.SINGLE_BRD	3D5 24D3
	BB_JTAG_TRST_L - @single_brd_lib.RADIO_MLB(i616_page 24)	35B8 35C3 38B5
AP_TO_BB_RST_L	AP_TO_BB_RST_L - @single_brd_lib.SINGLE_BRD	3C8 24D6
	BB_RST_L - @single_brd_lib.RADIO_MLB(i616_page 24)	35C1 35D8 37C8
AP_TO_BB_UART4_RTS_L	AP_TO_BB_UART4_RTS_L - @single_brd_lib.SINGLE_BRD	3C5 24C6
	BB_UART_CTS_L - @single_brd_lib.RADIO_MLB(i616_page 24)	35C3 35C8 39C4
AP_TO_BB_UART4_TXD	AP_TO_BB_UART4_TXD - @single_brd_lib.SINGLE_BRD	3C5 16C4 24C6
	BB_UART_RXD - @single_brd_lib.RADIO_MLB(i616_page 24)	35C3 35C8 39C4
AP_TO_BB_WAKE_MODEM	AP_TO_BB_WAKE_MODEM - @single_brd_lib.SINGLE_BRD	3C8 24B6
	AP_WAKE_MODEM - @single_brd_lib.RADIO_MLB(i616_page 24)	35D8 39B4
AP_TO_BT_I2S3_DOUT	AP_TO_BT_I2S3_DOUT - @single_brd_lib.SINGLE_BRD	3C4 24B6
	BT_PCM_IN - @single_brd_lib.RADIO_MLB(i616_page 24)	35B8 56B3
AP_TO_BT_I2S3_LRCLK	AP_TO_BT_I2S3_LRCLK - @single_brd_lib.SINGLE_BRD	3C4 24B6
	BT_PCM_SYNC - @single_brd_lib.RADIO_MLB(i616_page 24)	35B8 56B3
AP_TO_BT_UART1_RTS_L	AP_TO_BT_UART1_RTS_L - @single_brd_lib.SINGLE_BRD	3C5 24B6
	BT_UART_CTS_L - @single_brd_lib.RADIO_MLB(i616_page 24)	35B8 56B3
AP_TO_BT_UART1_TXD	AP_TO_BT_UART1_TXD - @single_brd_lib.SINGLE_BRD	3C5 24B6
	BT_UART_RXD - @single_brd_lib.RADIO_MLB(i616_page 24)	35B6 35B8 56C3
AP_TO_BT_WAKE	AP_TO_BT_WAKE - @single_brd_lib.SINGLE_BRD	3C8 24B6
	BT_WAKE - @single_brd_lib.RADIO_MLB(i616_page 24)	35B8 35D1 56C2
AP_TO_CODEC_ASP_I2S0_DOUT	AP_TO_CODEC_ASP_I2S0_DOUT - @single_brd_lib.SINGLE_BRD	3D4 10C3
AP_TO_CODEC_ASP_I2S0_LRCLK	AP_TO_CODEC_ASP_I2S0_LRCLK - @single_brd_lib.SINGLE_BRD	3D4 10D3
AP_TO_CODEC_SPI3_CLK	AP_TO_CODEC_SPI3_CLK - @single_brd_lib.SINGLE_BRD	3B4 10C3
AP_TO_CODEC_SPI3_CS_L	AP_TO_CODEC_SPI3_CS_L - @single_brd_lib.SINGLE_BRD	3B4 10C3
AP_TO_CODEC_SPI3_MOSI	AP_TO_CODEC_SPI3_MOSI - @single_brd_lib.SINGLE_BRD	3B4 10C3
AP_TO_CODEC_VSP_I2S4_DOUT	AP_TO_CODEC_VSP_I2S4_DOUT - @single_brd_lib.SINGLE_BRD	3C4 10C3
AP_TO_CODEC_VSP_I2S4_LRCLK	AP_TO_CODEC_VSP_I2S4_LRCLK - @single_brd_lib.SINGLE_BRD	3C4 10C3
AP_TO_CODEC_XSP_I2S2_DOUT	AP_TO_CODEC_XSP_I2S2_DOUT - @single_brd_lib.SINGLE_BRD	3C4 10C3 15C6
AP_TO_CODEC_XSP_I2S2_LRCLK	AP_TO_CODEC_XSP_I2S2_LRCLK - @single_brd_lib.SINGLE_BRD	3C4 10C3 15C6
AP_TO_EEPROM_I2C_SCL	AP_TO_EEPROM_I2C_SCL - @single_brd_lib.SINGLE_BRD	3C2 16A8
AP_TO_FCAM_I2C_SCL	AP_TO_FCAM_I2C_SCL - @single_brd_lib.SINGLE_BRD	7C4 11D7
AP_TO_FCAM_SCL_CONN	AP_TO_FCAM_SCL_CONN - @single_brd_lib.SINGLE_BRD	11D6
AP_TO_FCAM_SHUTDOWN	AP_TO_FCAM_SHUTDOWN - @single_brd_lib.SINGLE_BRD	7C5 11D8
AP_TO_FCAM_SHUTDOWN_CONN	AP_TO_FCAM_SHUTDOWN_CONN - @single_brd_lib.SINGLE_BRD	11D6
AP_TO_HEADSET_HS3_CTRL	AP_TO_HEADSET_HS3_CTRL - @single_brd_lib.SINGLE_BRD	3C8 17C8
AP_TO_HEADSET_HS3_CTRL_CONN	AP_TO_HEADSET_HS3_CTRL_CONN - @single_brd_lib.SINGLE_BRD	17C7
AP_TO_HEADSET_HS4_CTRL	AP_TO_HEADSET_HS4_CTRL - @single_brd_lib.SINGLE_BRD	3C8 17B8
AP_TO_HEADSET_HS4_CTRL_CONN	AP_TO_HEADSET_HS4_CTRL_CONN - @single_brd_lib.SINGLE_BRD	17C4 17C6
AP_TO_I2C0_SCL	AP_TO_I2C0_SCL - @single_brd_lib.SINGLE_BRD	3D1 13B6 14B7 14C6 15C6 16C2
AP_TO_I2C1_SCL	AP_TO_I2C1_SCL - @single_brd_lib.SINGLE_BRD	3D1 11B7
AP_TO_I2C1_SCL_ALS_CONN	AP_TO_I2C1_SCL_ALS_CONN - @single_brd_lib.SINGLE_BRD	11C5
AP_TO_LCM_RESET_CONN_L	AP_TO_LCM_RESET_CONN_L - @single_brd_lib.SINGLE_BRD	19C5
AP_TO_LCM_RESET_L	AP_TO_LCM_RESET_L - @single_brd_lib.SINGLE_BRD	3C8 19C2
AP_TO_LEDDRV_EN	AP_TO_LEDDRV_EN - @single_brd_lib.SINGLE_BRD	7C8 15A6
AP_TO_NAND_ANC0_ALE	AP_TO_NAND_ANC0_ALE - @single_brd_lib.SINGLE_BRD	6B8 6C2
AP_TO_NAND_ANC0_CEN0_L	AP_TO_NAND_ANC0_CEN0_L - @single_brd_lib.SINGLE_BRD	6C2 6C8
AP_TO_NAND_ANC0_CLE	AP_TO_NAND_ANC0_CLE - @single_brd_lib.SINGLE_BRD	6B8 6C2
AP_TO_NAND_ANC0_WE_L	AP_TO_NAND_ANC0_WE_L - @single_brd_lib.SINGLE_BRD	6B8 6C2
AP_TO_NAND_ANC1_ALE	AP_TO_NAND_ANC1_ALE - @single_brd_lib.SINGLE_BRD	6B6 6C3
AP_TO_NAND_ANC1_CEN0_L	AP_TO_NAND_ANC1_CEN0_L - @single_brd_lib.SINGLE_BRD	6C3 6C6
AP_TO_NAND_ANC1_CLE	AP_TO_NAND_ANC1_CLE - @single_brd_lib.SINGLE_BRD	6B6 6C3
AP_TO_NAND_ANC1_WE_L	AP_TO_NAND_ANC1_WE_L - @single_brd_lib.SINGLE_BRD	6B6 6C3
AP_TO_NAND_ANC_DQVREF	AP_TO_NAND_ANC_DQVREF - @single_brd_lib.SINGLE_BRD	6B2 6B6 6B8 6C5
AP_TO_NAVAJO_SPI2_CLK	AP_TO_NAVAJO_SPI2_CLK - @single_brd_lib.SINGLE_BRD	3B5 17D1
AP_TO_NAVAJO_SPI2_CLK_CONN	AP_TO_NAVAJO_SPI2_CLK_CONN - @single_brd_lib.SINGLE_BRD	17C4 17D3
AP_TO_NAVAJO_SPI2_CLK_R	AP_TO_NAVAJO_SPI2_CLK_R - @single_brd_lib.SINGLE_BRD	3B4
AP_TO_NAVAJO_SPI2_MOSI	AP_TO_NAVAJO_SPI2_MOSI - @single_brd_lib.SINGLE_BRD	3B4 17D1
AP_TO_NAVAJO_SPI2_MOSI_CONN	AP_TO_NAVAJO_SPI2_MOSI_CONN - @single_brd_lib.SINGLE_BRD	17C5 17D3
AP_TO_OSCAR_DBGEN	AP_TO_OSCAR_DBGEN - @single_brd_lib.SINGLE_BRD	3C8 20C5
AP_TO_OSCAR_RESET_L	AP_TO_OSCAR_RESET_L - @single_brd_lib.SINGLE_BRD	3C5 20C7
AP_TO_OSCAR_SWDCLK_1V8	AP_TO_OSCAR_SWDCLK_1V8 - @single_brd_lib.SINGLE_BRD	3C2 20C5
AP_TO_OSCAR_UART2_TXD	AP_TO_OSCAR_UART2_TXD - @single_brd_lib.SINGLE_BRD	3C5 20C5
AP_TO_PMU_KEEPACT	AP_TO_PMU_KEEPACT - @single_brd_lib.SINGLE_BRD	3C8 13B2
AP_TO_PMU_RESET_IN	AP_TO_PMU_RESET_IN -	2B3 13B6

FOXCONN-RD-EE

	@single_brd_lib.SINGLE_BRD	
AP_TO_PMU_SOCHOT1	AP_TO_PMU_SOCHOT1 - @single_brd_lib.SINGLE_BRD	3B1 13B6
AP_TO_PMU_SOCHOT1_H6P	AP_TO_PMU_SOCHOT1_H6P - @single_brd_lib.SINGLE_BRD	3B2
AP_TO_PMU_TEST_CLKOUT	AP_TO_PMU_TEST_CLKOUT - @single_brd_lib.SINGLE_BRD	2B3 13C6
AP_TO_PMU_VIBE_PWM_EN	AP_TO_PMU_VIBE_PWM_EN - @single_brd_lib.SINGLE_BRD	3C5 12B7
AP_TO_RADIO_ON_L	AP_TO_RADIO_ON_L - @single_brd_lib.SINGLE_BRD	3C8 24D6
	RADIO_ON_L - @single_brd_lib.RADIO_MLB(i616_page 24)	35D3 35D8 37C8
AP_TO_RCAM_I2C_SCL	AP_TO_RCAM_I2C_SCL - @single_brd_lib.SINGLE_BRD	7C4 15A6 20D5 21B7
AP_TO_RCAM_I2C_SCL_CONN	AP_TO_RCAM_I2C_SCL_CONN - @single_brd_lib.SINGLE_BRD	21C4
AP_TO_RCAM_SHUTDOWN	AP_TO_RCAM_SHUTDOWN - @single_brd_lib.SINGLE_BRD	7C5 21B7
AP_TO_RCAM_SHUTDOWN_CONN	AP_TO_RCAM_SHUTDOWN_CONN - @single_brd_lib.SINGLE_BRD	21B4
AP_TO_RCAM_VDDCORE_EN	AP_TO_RCAM_VDDCORE_EN - @single_brd_lib.SINGLE_BRD	3C5 21C7
AP_TO_SPKAMP_BEE_GEES	AP_TO_SPKAMP_BEE_GEES - @single_brd_lib.SINGLE_BRD	3D8 15C6
AP_TO_SPKAMP_RESET_L	AP_TO_SPKAMP_RESET_L - @single_brd_lib.SINGLE_BRD	3C8 15C7
AP_TO_TOUCH_GRAPE_RESET_L	AP_TO_TOUCH_GRAPE_RESET_L - @single_brd_lib.SINGLE_BRD	3C8 18B7
AP_TO_TOUCH_SPI1_CLK	AP_TO_TOUCH_SPI1_CLK - @single_brd_lib.SINGLE_BRD	3B4 18B8
AP_TO_TOUCH_SPI1_CS_L	AP_TO_TOUCH_SPI1_CS_L - @single_brd_lib.SINGLE_BRD	3B4 18B8
AP_TO_TOUCH_SPI1_MOSI	AP_TO_TOUCH_SPI1_MOSI - @single_brd_lib.SINGLE_BRD	3B4 18B8
AP_TO_TRISTAR_ACC_UART6_TXD	AP_TO_TRISTAR_ACC_UART6_TXD - @single_brd_lib.SINGLE_BRD	3B5 16C4
AP_TO_TRISTAR_DEBUG_UART0_TXD	AP_TO_TRISTAR_DEBUG_UART0_TXD - @single_brd_lib.SINGLE_BRD	3C5 16C4
AP_TO_WLAN_HSIC2_RDY	AP_TO_WLAN_HSIC2_RDY - @single_brd_lib.SINGLE_BRD	3C2 24B6
	AP_HSIC3_RDY - @single_brd_lib.RADIO_MLB(i616_page 24)	35C6 35C8 56B3
AP_TO_WLAN_UART3_TXD	AP_TO_WLAN_UART3_TXD - @single_brd_lib.SINGLE_BRD	3C5 24C6
	WLAN_UART_RXD - @single_brd_lib.RADIO_MLB(i616_page 24)	35C8 56B3
BATTERY_NTC_CONN	BATTERY_NTC_CONN - @single_brd_lib.SINGLE_BRD	17C4 23D5
BATTERY_TO_PMU_NTC	BATTERY_TO_PMU_NTC - @single_brd_lib.SINGLE_BRD	13A6 17C1 22C4 23D5
BATTERY_TO_PMU_SENSE	BATTERY_TO_PMU_SENSE - @single_brd_lib.SINGLE_BRD	12C7 22C6 23D5
BB_TO_ANTENNA_PAC_SPI_CS	BB_TO_ANTENNA_PAC_SPI_CS - @single_brd_lib.SINGLE_BRD	24A6
	BB_SPI_TO_PAC_CS - @single_brd_lib.RADIO_MLB(i616_page 24)	35B8 39C4 53C7
BB_TO_ANTENNA_PAC_SPI_MOSI	BB_TO_ANTENNA_PAC_SPI_MOSI - @single_brd_lib.SINGLE_BRD	24A6
	BB_SPI_TO_PAC_DATA_MOSI - @single_brd_lib.RADIO_MLB(i616_page 24)	35B8 39C4 53C7
BB_TO_ANTENNA_PAC_SPI_SCLK	BB_TO_ANTENNA_PAC_SPI_SCLK - @single_brd_lib.SINGLE_BRD	24A6
	BB_SPI_TO_PAC_CLK - @single_brd_lib.RADIO_MLB(i616_page 24)	35B8 39C4 53C7
BB_TO_AP_HSIC1_RDY	BB_TO_AP_HSIC1_RDY - @single_brd_lib.SINGLE_BRD	3C2 24B6
	PBL_RUN_BB_HSIC1_RDY - @single_brd_lib.RADIO_MLB(i616_page 24)	35C1 35D8 39B2
BB_TO_AP_HSIC1_REMOTE_WAKE	BB_TO_AP_HSIC1_REMOTE_WAKE - @single_brd_lib.SINGLE_BRD	3C2 24B6
	BB_HSIC1_REMOTE_WAKE - @single_brd_lib.RADIO_MLB(i616_page 24)	35C8 39B2
BB_TO_AP_I2S1_DIN	BB_TO_AP_I2S1_DIN - @single_brd_lib.SINGLE_BRD	3C4 24C6
	BB_I2S_TXD - @single_brd_lib.RADIO_MLB(i616_page 24)	35B5 35C8 39B4
BB_TO_AP_IPC_GPIO	BB_TO_AP_IPC_GPIO - @single_brd_lib.SINGLE_BRD	7C8 24A6
	BB_IPC_GPIO - @single_brd_lib.RADIO_MLB(i616_page 24)	35A8 39B2
BB_TO_AP_JTAG_TDO	BB_TO_AP_JTAG_TDO - @single_brd_lib.SINGLE_BRD	3C7 24D3
	BB_JTAG_TDO - @single_brd_lib.RADIO_MLB(i616_page 24)	35B8 35C3 38B3
BB_TO_AP_PP_SYNC	BB_TO_AP_PP_SYNC - @single_brd_lib.SINGLE_BRD	3C5 24C6
	PP_SYNC - @single_brd_lib.RADIO_MLB(i616_page 24)	35C8 39B2
BB_TO_AP_RESET_DET_L	BB_TO_AP_RESET_DET_L - @single_brd_lib.SINGLE_BRD	3C8 24D6
	RESET_DET_L - @single_brd_lib.RADIO_MLB(i616_page 24)	35C1 35D8 39B2
BB_TO_AP_UART4_CTS_L	BB_TO_AP_UART4_CTS_L - @single_brd_lib.SINGLE_BRD	3C5 24C6
	BB_UART_RTS_L - @single_brd_lib.RADIO_MLB(i616_page 24)	35C3 35C8 39C4
BB_TO_AP_UART4_RXD	BB_TO_AP_UART4_RXD - @single_brd_lib.SINGLE_BRD	3C5 16C4 24C6
	BB_UART_TXD - @single_brd_lib.RADIO_MLB(i616_page 24)	35C3 35C8 39C4
BB_TO_LAT_SW1_CTL	BB_TO_LAT_SW1_CTL - @single_brd_lib.SINGLE_BRD	17B1 24A6
	LAT_SW1_CTL - @single_brd_lib.RADIO_MLB(i616_page 24)	35B8 35C1 39C2
BB_TO_LAT_SW2_CTL	BB_TO_LAT_SW2_CTL - @single_brd_lib.SINGLE_BRD	17B1 24A6
	LAT_SW2_CTL -	35B8 39C2

	@single_brd_lib.RADIO_MLB(i616_page 24)	
BB_TO_LEDDRV_GSM_BLANK	BB_TO_LEDDRV_GSM_BLANK - @single_brd_lib.SINGLE_BRD	15A6 24D6
	TX_GTR_THRESH - @single_brd_lib.RADIO_MLB(i616_page 24)	35D8 39C2
BB_TO_PMU_HOST_WAKE	BB_TO_PMU_HOST_WAKE - @single_brd_lib.SINGLE_BRD	13B4 24C6
	HOST_WAKE_BB - @single_brd_lib.RADIO_MLB(i616_page 24)	35C1 35D8 39B2
BOARD_INFO	BOARD_INFO - @single_brd_lib.SINGLE_BRD	3A6 3A6 3A6 3B8 3C8 3C8
BOARD_INFO_M	BOARD_INFO_M - @single_brd_lib.SINGLE_BRD	3A6 3B8
BOARD_INFO_R	BOARD_INFO_R - @single_brd_lib.SINGLE_BRD	3A6 3B8
BT_TO_AP_I2S3_DIN	BT_TO_AP_I2S3_DIN - @single_brd_lib.SINGLE_BRD	3C4 24B6
	BT_PCM_OUT - @single_brd_lib.RADIO_MLB(i616_page 24)	35B8 56B3
BT_TO_AP_UART1_CTS_L	BT_TO_AP_UART1_CTS_L - @single_brd_lib.SINGLE_BRD	3C5 24B6
	BT_UART_RTS_L - @single_brd_lib.RADIO_MLB(i616_page 24)	35B8 56C3
BT_TO_AP_UART1_RXD	BT_TO_AP_UART1_RXD - @single_brd_lib.SINGLE_BRD	3C5 24B6
	BT_UART_TXD - @single_brd_lib.RADIO_MLB(i616_page 24)	35B6 35B8 56C3
BT_TO_PMU_HOST_WAKE	BT_TO_PMU_HOST_WAKE - @single_brd_lib.SINGLE_BRD	13B4 24B6
	HOST_WAKE_BT - @single_brd_lib.RADIO_MLB(i616_page 24)	35C8 56C3
BUTTON_TO_AP_HOLD_KEY_BUFF_L	BUTTON_TO_AP_HOLD_KEY_BUFF_L - @single_brd_lib.SINGLE_BRD	3A2 3D8 13C4 13C6
BUTTON_TO_AP_HOLD_KEY_CONN_L	BUTTON_TO_AP_HOLD_KEY_CONN_L - @single_brd_lib.SINGLE_BRD	8C5
BUTTON_TO_AP_HOLD_KEY_L	BUTTON_TO_AP_HOLD_KEY_L - @single_brd_lib.SINGLE_BRD	3A4 8B7
BUTTON_TO_AP_MENU_KEY_BUFF_L	BUTTON_TO_AP_MENU_KEY_BUFF_L - @single_brd_lib.SINGLE_BRD	3A2 3D8 13C4 13C6
BUTTON_TO_AP_MENU_KEY_CONN_L	BUTTON_TO_AP_MENU_KEY_CONN_L - @single_brd_lib.SINGLE_BRD	17C5
BUTTON_TO_AP_MENU_KEY_L	BUTTON_TO_AP_MENU_KEY_L - @single_brd_lib.SINGLE_BRD	3A4 17B8
BUTTON_TO_AP_RINGER_A	BUTTON_TO_AP_RINGER_A - @single_brd_lib.SINGLE_BRD	3C8 8B7 13C4 13C6
BUTTON_TO_AP_RINGER_A_CONN	BUTTON_TO_AP_RINGER_A_CONN - @single_brd_lib.SINGLE_BRD	8C5
BUTTON_TO_AP_VOL_DOWN_CONN_L	BUTTON_TO_AP_VOL_DOWN_CONN_L - @single_brd_lib.SINGLE_BRD	8C5
BUTTON_TO_AP_VOL_DOWN_L	BUTTON_TO_AP_VOL_DOWN_L - @single_brd_lib.SINGLE_BRD	3D8 8B7 13C6
BUTTON_TO_AP_VOL_UP_CONN_L	BUTTON_TO_AP_VOL_UP_CONN_L - @single_brd_lib.SINGLE_BRD	8C5
BUTTON_TO_AP_VOL_UP_L	BUTTON_TO_AP_VOL_UP_L - @single_brd_lib.SINGLE_BRD	3D8 8B7 13C6
CAM_EXT_LDO_EN	CAM_EXT_LDO_EN - @single_brd_lib.SINGLE_BRD	7C8 21B7
CAM_NTC_N	CAM_NTC_N - @single_brd_lib.SINGLE_BRD	13B7
CAM_NTC_P	CAM_NTC_P - @single_brd_lib.SINGLE_BRD	13B7
CAM_TO_PMU_NTC_P	CAM_TO_PMU_NTC_P - @single_brd_lib.SINGLE_BRD	13B6 23C2
CHESTNUT_TO_PMU_ADCIN7	CHESTNUT_TO_PMU_ADCIN7 - @single_brd_lib.SINGLE_BRD	13C2 13C6 14C6 23C2
CODEC_MBUS_REF	CODEC_MBUS_REF - @single_brd_lib.SINGLE_BRD	9B3 17D5
CODEC_RESET_L	CODEC_RESET_L - @single_brd_lib.SINGLE_BRD	10C3
CODEC_TO_AP_ASP_I2S0_DIN	CODEC_TO_AP_ASP_I2S0_DIN - @single_brd_lib.SINGLE_BRD	3D4 10C3
CODEC_TO_AP_INT_L	CODEC_TO_AP_INT_L - @single_brd_lib.SINGLE_BRD	3C8 10C3
CODEC_TO_AP_SPI3_MISO	CODEC_TO_AP_SPI3_MISO - @single_brd_lib.SINGLE_BRD	3B4 10C3
CODEC_TO_AP_VSP_I2S4_DIN	CODEC_TO_AP_VSP_I2S4_DIN - @single_brd_lib.SINGLE_BRD	3C4 10C3
CODEC_TO_AP_XSP_I2S2_DIN	CODEC_TO_AP_XSP_I2S2_DIN - @single_brd_lib.SINGLE_BRD	3C4 10C3 15C6
CODEC_TO_HAC_CONN_N	CODEC_TO_HAC_CONN_N - @single_brd_lib.SINGLE_BRD	11A6 23D7
CODEC_TO_HAC_CONN_P	CODEC_TO_HAC_CONN_P - @single_brd_lib.SINGLE_BRD	11A6 23D7
CODEC_TO_HAC_N	CODEC_TO_HAC_N - @single_brd_lib.SINGLE_BRD	9C3 11A8 23D7
CODEC_TO_HAC_P	CODEC_TO_HAC_P - @single_brd_lib.SINGLE_BRD	9C3 11A8 23D7
CODEC_TO_HPHONE_HS3	CODEC_TO_HPHONE_HS3 - @single_brd_lib.SINGLE_BRD	9C3 17C8 23D7
CODEC_TO_HPHONE_HS3_CONN	CODEC_TO_HPHONE_HS3_CONN - @single_brd_lib.SINGLE_BRD	17C4 17C6 23D7
CODEC_TO_HPHONE_HS3_REF	CODEC_TO_HPHONE_HS3_REF - @single_brd_lib.SINGLE_BRD	9B3 17C7 22B5 23D7
CODEC_TO_HPHONE_HS3_REF_CONN	CODEC_TO_HPHONE_HS3_REF_CONN - @single_brd_lib.SINGLE_BRD	17C5 23C7
CODEC_TO_HPHONE_HS4	CODEC_TO_HPHONE_HS4 - @single_brd_lib.SINGLE_BRD	9B3 17C8 23D7
CODEC_TO_HPHONE_HS4_CONN	CODEC_TO_HPHONE_HS4_CONN - @single_brd_lib.SINGLE_BRD	17C6 23C7
CODEC_TO_HPHONE_HS4_REF	CODEC_TO_HPHONE_HS4_REF - @single_brd_lib.SINGLE_BRD	9B3 17C7 22B5 23D7
CODEC_TO_HPHONE_HS4_REF_CONN	CODEC_TO_HPHONE_HS4_REF_CONN - @single_brd_lib.SINGLE_BRD	17C5 23C7
CODEC_TO_HPHONE_L	CODEC_TO_HPHONE_L - @single_brd_lib.SINGLE_BRD	9C2 17C1 23D7
CODEC_TO_HPHONE_L_CONN	CODEC_TO_HPHONE_L_CONN - @single_brd_lib.SINGLE_BRD	17C4 23D7
CODEC_TO_HPHONE_R	CODEC_TO_HPHONE_R - @single_brd_lib.SINGLE_BRD	9C2 17C1 23D7
CODEC_TO_HPHONE_R_CONN	CODEC_TO_HPHONE_R_CONN - @single_brd_lib.SINGLE_BRD	17C4 23D7
CODEC_TO_MIC2_BIAS_CONN	CODEC_TO_MIC2_BIAS_CONN - @single_brd_lib.SINGLE_BRD	8C4
CODEC_TO_PMU_MIKEY_INT_L	CODEC_TO_PMU_MIKEY_INT_L - @single_brd_lib.SINGLE_BRD	10C3 13B4
CODEC_TO_RCVR_CONN_N	CODEC_TO_RCVR_CONN_N - @single_brd_lib.SINGLE_BRD	11A6 23D7

CODEC_TO_RCVR_CONN_P	CODEC_TO_RCVR_CONN_P - @single_brd_lib.SINGLE_BRD	11A6 23D7
CODEC_TO_RCVR_N	CODEC_TO_RCVR_N - @single_brd_lib.SINGLE_BRD	9C3 11A8 23D7
CODEC_TO_RCVR_P	CODEC_TO_RCVR_P - @single_brd_lib.SINGLE_BRD	9C3 11A8 23D7
COMPASS_TO_OSCAR_INT	COMPASS_TO_OSCAR_INT - @single_brd_lib.SINGLE_BRD	20C7
COMPASS_TO_OSCAR_INT_FL	COMPASS_TO_OSCAR_INT_FL - @single_brd_lib.SINGLE_BRD	20A5 20D8
CUMULUS_TO_PROX_RX_EN_1V8	CUMULUS_TO_PROX_RX_EN_1V8 - @single_brd_lib.SINGLE_BRD	11C8 18B5
CUMULUS_TO_PROX_RX_EN_1V8_CONN	CUMULUS_TO_PROX_RX_EN_1V8_CONN - @single_brd_lib.SINGLE_BRD	11C5
CUMULUS_TO_PROX_TX_EN_1V8_L	CUMULUS_TO_PROX_TX_EN_1V8_L - @single_brd_lib.SINGLE_BRD	18A3 18B7
CUMULUS_TO_PROX_TX_EN_BUFF	CUMULUS_TO_PROX_TX_EN_BUFF - @single_brd_lib.SINGLE_BRD	11B2 18A4
CUMULUS_TO_SAGE_BOOST_EN	CUMULUS_TO_SAGE_BOOST_EN - @single_brd_lib.SINGLE_BRD	18B1 18B5
CUMULUS_TO_SAGE_GCM_SEL	CUMULUS_TO_SAGE_GCM_SEL - @single_brd_lib.SINGLE_BRD	18B1 18B5
CUMULUS_TO_SAGE_VSTM_OUT<0>	CUMULUS_TO_SAGE_VSTM_OUT<0> - @single_brd_lib.SINGLE_BRD	18B3 18B5 23D8
CUMULUS_TO_SAGE_VSTM_OUT<1>	CUMULUS_TO_SAGE_VSTM_OUT<1> - @single_brd_lib.SINGLE_BRD	18C3 18C5 23D8
CUMULUS_TO_SAGE_VSTM_OUT<2>	CUMULUS_TO_SAGE_VSTM_OUT<2> - @single_brd_lib.SINGLE_BRD	18B3 18C5 23D8
CUMULUS_TO_SAGE_VSTM_OUT<3>	CUMULUS_TO_SAGE_VSTM_OUT<3> - @single_brd_lib.SINGLE_BRD	18B3 18C5 23D8
CUMULUS_TO_SAGE_VSTM_OUT<4>	CUMULUS_TO_SAGE_VSTM_OUT<4> - @single_brd_lib.SINGLE_BRD	18C3 18C5 23D8
CUMULUS_TO_SAGE_VSTM_OUT<5>	CUMULUS_TO_SAGE_VSTM_OUT<5> - @single_brd_lib.SINGLE_BRD	18C3 18C5 23D8
CUMULUS_TO_SAGE_VSTM_OUT<6>	CUMULUS_TO_SAGE_VSTM_OUT<6> - @single_brd_lib.SINGLE_BRD	18B5 18C3 23D8
CUMULUS_TO_SAGE_VSTM_OUT<7>	CUMULUS_TO_SAGE_VSTM_OUT<7> - @single_brd_lib.SINGLE_BRD	18C3 18C5 23D8
CUMULUS_TO_SAGE_VSTM_OUT<8>	CUMULUS_TO_SAGE_VSTM_OUT<8> - @single_brd_lib.SINGLE_BRD	18C3 18C5 23D8
CUMULUS_TO_SAGE_VSTM_OUT<9>	CUMULUS_TO_SAGE_VSTM_OUT<9> - @single_brd_lib.SINGLE_BRD	18C6 23D8
CUMULUS_TO_SAGE_VSTM_OUT<10>	CUMULUS_TO_SAGE_VSTM_OUT<10> - @single_brd_lib.SINGLE_BRD	18C6 23D8
CUMULUS_TO_SAGE_VSTM_OUT<11>	CUMULUS_TO_SAGE_VSTM_OUT<11> - @single_brd_lib.SINGLE_BRD	18B3 18C5 23D8
CUMULUS_TO_SAGE_VSTM_OUT<12>	CUMULUS_TO_SAGE_VSTM_OUT<12> - @single_brd_lib.SINGLE_BRD	18B5 18C3 23D8
CUMULUS_TO_SAGE_VSTM_OUT<13>	CUMULUS_TO_SAGE_VSTM_OUT<13> - @single_brd_lib.SINGLE_BRD	18C3 18C5 23D8
CUMULUS_TO_SAGE_VSTM_OUT<14>	CUMULUS_TO_SAGE_VSTM_OUT<14> - @single_brd_lib.SINGLE_BRD	18B5 18C3 23D8
CUMULUS_TO_SAGE_VSTM_OUT<15>	CUMULUS_TO_SAGE_VSTM_OUT<15> - @single_brd_lib.SINGLE_BRD	18B5 18C3 23D8
CUMULUS_TO_SAGE_VSTM_OUT<16>	CUMULUS_TO_SAGE_VSTM_OUT<16> - @single_brd_lib.SINGLE_BRD	18B3 18C5 23C8
CUMULUS_TO_SAGE_VSTM_OUT<17>	CUMULUS_TO_SAGE_VSTM_OUT<17> - @single_brd_lib.SINGLE_BRD	18B3 18C5 23C8
CUMULUS_TO_SAGE_VSTM_OUT<18>	CUMULUS_TO_SAGE_VSTM_OUT<18> - @single_brd_lib.SINGLE_BRD	18C3 18C5 23C8
CUMULUS_TO_SAGE_VSTM_OUT<19>	CUMULUS_TO_SAGE_VSTM_OUT<19> - @single_brd_lib.SINGLE_BRD	18B5 18C3 23C8
E75_TO_PMU_ACC_DETECT	E75_TO_PMU_ACC_DETECT - @single_brd_lib.SINGLE_BRD	13C2 16C2 17A1 23C2
E75_TO_PMU_ACC_DETECT_CONN	E75_TO_PMU_ACC_DETECT_CONN - @single_brd_lib.SINGLE_BRD	17B4 22B3 22C3
E75_TO_PMU_ACC_DETECT_R	E75_TO_PMU_ACC_DETECT_R - @single_brd_lib.SINGLE_BRD	13C4 23C2
EXTMIC_TO_CODEC_L67_N	EXTMIC_TO_CODEC_L67_N - @single_brd_lib.SINGLE_BRD	9C5
EXTMIC_TO_CODEC_L67_P	EXTMIC_TO_CODEC_L67_P - @single_brd_lib.SINGLE_BRD	9C5
EXTMIC_TO_CODEC_N	EXTMIC_TO_CODEC_N - @single_brd_lib.SINGLE_BRD	9C8 17C8
EXTMIC_TO_CODEC_P	EXTMIC_TO_CODEC_P - @single_brd_lib.SINGLE_BRD	9C8 17C8
FORCE_DFU	FORCE_DFU - @single_brd_lib.SINGLE_BRD	3B8 3C8 22B4
FOREHEAD_NTC_N	FOREHEAD_NTC_N - @single_brd_lib.SINGLE_BRD	13C7
FOREHEAD_NTC_P	FOREHEAD_NTC_P - @single_brd_lib.SINGLE_BRD	13C7
FOREHEAD_TO_PMU_NTC_P	FOREHEAD_TO_PMU_NTC_P - @single_brd_lib.SINGLE_BRD	13B6 23C2
GYRO_PUMP	GYRO_PUMP - @single_brd_lib.SINGLE_BRD	20C2 23C5
GYRO_TO_OSCAR_INT1	GYRO_TO_OSCAR_INT1 - @single_brd_lib.SINGLE_BRD	20C3 20C7
GYRO_TO_OSCAR_INT2	GYRO_TO_OSCAR_INT2 - @single_brd_lib.SINGLE_BRD	20C3 20D7
H6P_NTC_N	H6P_NTC_N - @single_brd_lib.SINGLE_BRD	13A7
H6P_NTC_P	H6P_NTC_P - @single_brd_lib.SINGLE_BRD	13A7
H6P_TO_PMU_NTC_P	H6P_TO_PMU_NTC_P - @single_brd_lib.SINGLE_BRD	13B6 23C2
HAC_TO_CODEC_TEST	HAC_TO_CODEC_TEST - @single_brd_lib.SINGLE_BRD	9A7 11A7 23B7
HAC_TO_CODEC_TEST_L67	HAC_TO_CODEC_TEST_L67 - @single_brd_lib.SINGLE_BRD	9B6 23B7
HPHONE_TO_CODEC_DET	HPHONE_TO_CODEC_DET - @single_brd_lib.SINGLE_BRD	9B3 17D7 23C7
HPHONE_TO_CODEC_DET_CONN	HPHONE_TO_CODEC_DET_CONN - @single_brd_lib.SINGLE_BRD	17C5 23C7
HPHONE_TO_CODEC_HPHONE_TEST	HPHONE_TO_CODEC_HPHONE_TEST - @single_brd_lib.SINGLE_BRD	9A7 17C2 23B7
HPHONE_TO_CODEC_HPHONE_TEST_L67	HPHONE_TO_CODEC_HPHONE_TEST_L67 - @single_brd_lib.SINGLE_BRD	9B6 23B7
IMU_TO_OSCAR_SPI_MISO	IMU_TO_OSCAR_SPI_MISO - @single_brd_lib.SINGLE_BRD	20D5
IMU_TO_OSCAR_SPI_MISO_FL	IMU_TO_OSCAR_SPI_MISO_FL - @single_brd_lib.SINGLE_BRD	20A5 20B1 20C1 20D4
LCM_DESENSE	LCM_DESENSE - @single_brd_lib.SINGLE_BRD	14B5
LCM_DESENSE_CONN	LCM_DESENSE_CONN - @single_brd_lib.SINGLE_BRD	19B4
LCM_TO_AP_HIFA_BSYNC	LCM_TO_AP_HIFA_BSYNC - @single_brd_lib.SINGLE_BRD	3C8 18A3 18B1 19C2
LCM_TO_AP_HIFA_BSYNC_BUFF	LCM_TO_AP_HIFA_BSYNC_BUFF - @single_brd_lib.SINGLE_BRD	14C6 18A4
LCM_TO_AP_HIFA_BSYNC_CONN	LCM_TO_AP_HIFA_BSYNC_CONN - @single_brd_lib.SINGLE_BRD	19C5
LCM_TO_AP_PANIC_L	LCM_TO_AP_PANIC_L - @single_brd_lib.SINGLE_BRD	19C5

LCM_TO_AP_PIFA_CONN	LCM_TO_AP_PIFA_CONN - @single_brd_lib.SINGLE_BRD	19C5
LCM_TO_CHESTNUT_PWR_EN	LCM_TO_CHESTNUT_PWR_EN - @single_brd_lib.SINGLE_BRD	13C6 14C6 19D2
LCM_TO_CHESTNUT_PWR_EN_CONN	LCM_TO_CHESTNUT_PWR_EN_CONN - @single_brd_lib.SINGLE_BRD	19C5
MESA_TO_BOOST_EN	MESA_TO_BOOST_EN - @single_brd_lib.SINGLE_BRD	14B3 17D7
MESA_TO_BOOST_EN_DOCK_CONN	MESA_TO_BOOST_EN_DOCK_CONN - @single_brd_lib.SINGLE_BRD	17C5
MIC1_TO_CODEC_L67_N	MIC1_TO_CODEC_L67_N - @single_brd_lib.SINGLE_BRD	9C5 23C7
MIC1_TO_CODEC_L67_P	MIC1_TO_CODEC_L67_P - @single_brd_lib.SINGLE_BRD	9C5 23C7
MIC1_TO_CODEC_N	MIC1_TO_CODEC_N - @single_brd_lib.SINGLE_BRD	9C7 17B8 23C7
MIC1_TO_CODEC_P	MIC1_TO_CODEC_P - @single_brd_lib.SINGLE_BRD	9C7 17B8 22B3 23C7
MIC2_TO_CODEC_L67_N	MIC2_TO_CODEC_L67_N - @single_brd_lib.SINGLE_BRD	9C5 23B7
MIC2_TO_CODEC_L67_P	MIC2_TO_CODEC_L67_P - @single_brd_lib.SINGLE_BRD	9C5 23B7
MIC2_TO_CODEC_N	MIC2_TO_CODEC_N - @single_brd_lib.SINGLE_BRD	8C2 9B7 23B7
MIC2_TO_CODEC_P	MIC2_TO_CODEC_P - @single_brd_lib.SINGLE_BRD	8C2 9B7 22B3 23B7
MIC3_TO_CODEC_L67_N	MIC3_TO_CODEC_L67_N - @single_brd_lib.SINGLE_BRD	9B5 23B7
MIC3_TO_CODEC_L67_P	MIC3_TO_CODEC_L67_P - @single_brd_lib.SINGLE_BRD	9C5 23B7
MIC3_TO_CODEC_N	MIC3_TO_CODEC_N - @single_brd_lib.SINGLE_BRD	9B7 11C2 23B7
MIC3_TO_CODEC_P	MIC3_TO_CODEC_P - @single_brd_lib.SINGLE_BRD	9B7 11C2 22B3 23B7
MOJAVE_SW	MOJAVE_SW - @single_brd_lib.SINGLE_BRD	14B3
NAND_RDYBSY0	NAND_RDYBSY0 - @single_brd_lib.SINGLE_BRD	6C3
NAND_RDYBSY1	NAND_RDYBSY1 - @single_brd_lib.SINGLE_BRD	6B3
NAND_TO_PP_TCKC	NAND_TO_PP_TCKC - @single_brd_lib.SINGLE_BRD	6B4
NAND_TO_PP_TMSC	NAND_TO_PP_TMSC - @single_brd_lib.SINGLE_BRD	6B4
NAVAJO_TO_AP_SPI2_MISO	NAVAJO_TO_AP_SPI2_MISO - @single_brd_lib.SINGLE_BRD	3B4 17D1
NAVAJO_TO_AP_SPI2_MISO_CONN	NAVAJO_TO_AP_SPI2_MISO_CONN - @single_brd_lib.SINGLE_BRD	17D3
NAVAJO_TO_PMU_INT_CONN_H	NAVAJO_TO_PMU_INT_CONN_H - @single_brd_lib.SINGLE_BRD	17C5 17D3
NAVAJO_TO_PMU_INT_H	NAVAJO_TO_PMU_INT_H - @single_brd_lib.SINGLE_BRD	3B4 13B4 17D1
OSCAR_BI_AP_TIME_SYNC_HOST_INT	OSCAR_BI_AP_TIME_SYNC_HOST_INT - @single_brd_lib.SINGLE_BRD	3D5 20C7
OSCAR_TO_ACCEL_SPI_CS_L	OSCAR_TO_ACCEL_SPI_CS_L - @single_brd_lib.SINGLE_BRD	20B3 20D7
OSCAR_TO_AP_UART2_RXD	OSCAR_TO_AP_UART2_RXD - @single_brd_lib.SINGLE_BRD	3C5 20C5
OSCAR_TO_COMPASS_SPI_CS_FL_L	OSCAR_TO_COMPASS_SPI_CS_FL_L - @single_brd_lib.SINGLE_BRD	20A5 20D8
OSCAR_TO_COMPASS_SPI_CS_L	OSCAR_TO_COMPASS_SPI_CS_L - @single_brd_lib.SINGLE_BRD	20C6
OSCAR_TO_GYRO_SPI_CS_L	OSCAR_TO_GYRO_SPI_CS_L - @single_brd_lib.SINGLE_BRD	20D3 20D7
OSCAR_TO_IMU_SPI_MOSI	OSCAR_TO_IMU_SPI_MOSI - @single_brd_lib.SINGLE_BRD	20D5
OSCAR_TO_IMU_SPI_MOSI_FL	OSCAR_TO_IMU_SPI_MOSI_FL - @single_brd_lib.SINGLE_BRD	20A5 20B1 20C1 20D4
OSCAR_TO_IMU_SPI_SCLK	OSCAR_TO_IMU_SPI_SCLK - @single_brd_lib.SINGLE_BRD	20D5
OSCAR_TO_IMU_SPI_SCLK_FL	OSCAR_TO_IMU_SPI_SCLK_FL - @single_brd_lib.SINGLE_BRD	20A5 20B1 20D1 20D4
OSCAR_TO_PMU_HOST_WAKE	OSCAR_TO_PMU_HOST_WAKE - @single_brd_lib.SINGLE_BRD	3C5 13B4 20C7
OSCAR_TO_RADIO_CONTEXT_A	OSCAR_TO_RADIO_CONTEXT_A - @single_brd_lib.SINGLE_BRD	20C5 24A6
	OSCAR_CONTEXT_A - @single_brd_lib.RADIO_MLB(i616_page 24)	35A8 39B4 56B3
OSCAR_TO_RADIO_CONTEXT_B	OSCAR_TO_RADIO_CONTEXT_B - @single_brd_lib.SINGLE_BRD	20C5 24A6
	OSCAR_CONTEXT_B - @single_brd_lib.RADIO_MLB(i616_page 24)	35A8 39B2 56B3
P17V0_MOJAVE_LDOIN	P17V0_MOJAVE_LDOIN - @single_brd_lib.SINGLE_BRD	14B2
PA_NTC_N	PA_NTC_N - @single_brd_lib.SINGLE_BRD	13B7
PA_NTC_P	PA_NTC_P - @single_brd_lib.SINGLE_BRD	13B7
PA_TO_PMU_NTC_P	PA_TO_PMU_NTC_P - @single_brd_lib.SINGLE_BRD	13B6 23C2
PGND_CODEC_GNDCP	PGND_CODEC_GNDCP - @single_brd_lib.SINGLE_BRD	10B5
PGND_IRLED_DRAIN	PGND_IRLED_DRAIN - @single_brd_lib.SINGLE_BRD	11B4
PGND_IRLED_K	PGND_IRLED_K - @single_brd_lib.SINGLE_BRD	11C4
PGND_MIC1_TO_CODEC_RET	PGND_MIC1_TO_CODEC_RET - @single_brd_lib.SINGLE_BRD	10B8 17B8
PGND_MIC1_TO_CODEC_RET_FILT	PGND_MIC1_TO_CODEC_RET_FILT - @single_brd_lib.SINGLE_BRD	10B7
PGND_MIC2_3_TO_CODEC_RET	PGND_MIC2_3_TO_CODEC_RET - @single_brd_lib.SINGLE_BRD	8C2 10A8 11C4
PGND_MIC2_3_TO_CODEC_RET_FILT	PGND_MIC2_3_TO_CODEC_RET_FILT - @single_brd_lib.SINGLE_BRD	10B7
PGND_OPEL	PGND_OPEL - @single_brd_lib.SINGLE_BRD	15A4 15A4
PGND_RCAM_AF_RET	PGND_RCAM_AF_RET - @single_brd_lib.SINGLE_BRD	12B1 21C4
PGND_SCREW_HOLE1	PGND_SCREW_HOLE1 - @single_brd_lib.SINGLE_BRD	22A7
PGND_STANDOFF1	PGND_STANDOFF1 - @single_brd_lib.SINGLE_BRD	22A6
PGND_STANDOFF2	PGND_STANDOFF2 - @single_brd_lib.SINGLE_BRD	22A6
PMU_ACT_DIO	PMU_ACT_DIO - @single_brd_lib.SINGLE_BRD	12C6 23B7
PMU_TO_AP_IRQ_L	PMU_TO_AP_IRQ_L - @single_brd_lib.SINGLE_BRD	3C8 13B6
PMU_TO_BB_RST_L	PMU_TO_BB_RST_L - @single_brd_lib.SINGLE_BRD	13B3 24D6
	RESET_PMU_L - @single_brd_lib.RADIO_MLB(i616_page	35D3 35D8 37C8

	24)	
PMU_TO_BB_RST_R_L	PMU_TO_BB_RST_R_L - @single_brd_lib.SINGLE_BRD	13B4
PMU_TO_BB_VBUS_DET	PMU_TO_BB_VBUS_DET - @single_brd_lib.SINGLE_BRD	13B4 24C6
	BB_USB_VBUS - @single_brd_lib.RADIO_MLB(i616_page 24)	35C3 35C8 38A5
PMU_TO_BT_REG_ON	PMU_TO_BT_REG_ON - @single_brd_lib.SINGLE_BRD	13B3 24B6
	BT_REG_ON - @single_brd_lib.RADIO_MLB(i616_page 24)	35B8 35C1 56C6
PMU_TO_BT_REG_ON_R	PMU_TO_BT_REG_ON_R - @single_brd_lib.SINGLE_BRD	13B4
PMU_TO_TP_AMUX_AY	PMU_TO_TP_AMUX_AY - @single_brd_lib.SINGLE_BRD	13C6 22C4 23C2
PMU_TO_TP_AMUX_BY	PMU_TO_TP_AMUX_BY - @single_brd_lib.SINGLE_BRD	13B6 22C4 23C2
PMU_TO_WLAN_REG_ON	PMU_TO_WLAN_REG_ON - @single_brd_lib.SINGLE_BRD	13B3 24C6
	WLAN_REG_ON - @single_brd_lib.RADIO_MLB(i616_page 24)	35C1 35C8 56C6
PMU_TO_WLAN_REG_ON_R	PMU_TO_WLAN_REG_ON_R - @single_brd_lib.SINGLE_BRD	13B4
PN5V7_LCM_AVDDN	PN5V7_LCM_AVDDN - @single_brd_lib.SINGLE_BRD	19C5 23D5
PN5V7_SAGE_AVDDN	PN5V7_SAGE_AVDDN - @single_brd_lib.SINGLE_BRD	14C3 18D5 19D2 23D5
PN5V7_SAGE_AVDDN_INT	PN5V7_SAGE_AVDDN_INT - @single_brd_lib.SINGLE_BRD	18D4 23D5
PP1V0	PP1V0 - @single_brd_lib.SINGLE_BRD	2C3 7C3 7D8 12A2 23B5
PP1V0_SOC	PP1V0_SOC - @single_brd_lib.SINGLE_BRD	4D6 12C3 23B5
PP1V0_SRAM	PP1V0_SRAM - @single_brd_lib.SINGLE_BRD	5C3 12C1 23B5
PP1V1_CPU	PP1V1_CPU - @single_brd_lib.SINGLE_BRD	4D3 12D3 23B5
PP1V1_GPU	PP1V1_GPU - @single_brd_lib.SINGLE_BRD	4D3 12C3 23B5
PP1V2	PP1V2 - @single_brd_lib.SINGLE_BRD	2C6 4A6 4B8 5D5 12B5 23B5
PP1V2_NAND_VDDI	PP1V2_NAND_VDDI - @single_brd_lib.SINGLE_BRD	6D4 23B5
PP1V2_OSCAR	PP1V2_OSCAR - @single_brd_lib.SINGLE_BRD	12B5 20D7 23B5
PP1V2_OSCAR_VDDC	PP1V2_OSCAR_VDDC - @single_brd_lib.SINGLE_BRD	20D6 23B5
PP1V2_RCAM_CONN	PP1V2_RCAM_CONN - @single_brd_lib.SINGLE_BRD	21B4 23B5
PP1V2_RCAM_SWITCHOUT	PP1V2_RCAM_SWITCHOUT - @single_brd_lib.SINGLE_BRD	21C6 23B5
PP1V2_SDRAM	PP1V2_SDRAM - @single_brd_lib.SINGLE_BRD	4A8 4C8 4D8 12B7 12D1 21C7 23B5
PP1V8	PP1V8 - @single_brd_lib.SINGLE_BRD	2B7 2C6 3A6 3D1 5A3 5B5 6C8 6D1 7C2 7C4 7D5 10C7 11C2 12B5 14B7 16B3 16B6 18D1 19C2 19D2 21C7 23D3
PP1V8_ALWAYS	PP1V8_ALWAYS - @single_brd_lib.SINGLE_BRD	3B4 12A2 23D3
PP1V8_COMP	PP1V8_COMP - @single_brd_lib.SINGLE_BRD	20A7 20B6 23D3
PP1V8_CUMULUS_VDDLDO	PP1V8_CUMULUS_VDDLDO - @single_brd_lib.SINGLE_BRD	18B7 18D6 23D3
PP1V8_FCAM_CONN	PP1V8_FCAM_CONN - @single_brd_lib.SINGLE_BRD	11C4 23D3
PP1V8_GRAPE	PP1V8_GRAPE - @single_brd_lib.SINGLE_BRD	12B5 18A3 18B5 18D5 23D3
PP1V8_LCM_CONN	PP1V8_LCM_CONN - @single_brd_lib.SINGLE_BRD	19C5 23D3
PP1V8_MESA_LOAD_SW_OUT	PP1V8_MESA_LOAD_SW_OUT - @single_brd_lib.SINGLE_BRD	17D7 23A5
PP1V8_OSCAR	PP1V8_OSCAR - @single_brd_lib.SINGLE_BRD	12B5 20B5 20C1 20C8 20D1 20D5 23D3
PP1V8_OSCAR_VDDIO	PP1V8_OSCAR_VDDIO - @single_brd_lib.SINGLE_BRD	20D6 23D3
PP1V8_PLL	PP1V8_PLL - @single_brd_lib.SINGLE_BRD	2C5 23D3
PP1V8_RCAM_CONN	PP1V8_RCAM_CONN - @single_brd_lib.SINGLE_BRD	21B4 23D3
PP1V8_SDRAM	PP1V8_SDRAM - @single_brd_lib.SINGLE_BRD	3A4 3C8 4B8 10C3 10C7 12D1 14B7 16D4 17D8 23D3 24D6
	PP_WL_BT_VDDIO_AP - @single_brd_lib.RADIO_MLB(i616_page 24)	35C8 56C3
PP1V8_SDRAM_DOCK_CONN	PP1V8_SDRAM_DOCK_CONN - @single_brd_lib.SINGLE_BRD	17C5 23D3
PP1V8_VA_L19_L67	PP1V8_VA_L19_L67 - @single_brd_lib.SINGLE_BRD	10C7 12A2 15D4 23D3
PP1V8_XTAL	PP1V8_XTAL - @single_brd_lib.SINGLE_BRD	5A5 23D3
PP2V5_RCAM_AF	PP2V5_RCAM_AF - @single_brd_lib.SINGLE_BRD	12A2 12B2 21D7 23D3
PP2V5_RCAM_AF_COMP	PP2V5_RCAM_AF_COMP - @single_brd_lib.SINGLE_BRD	12B1 21D7 23C3
PP2V5_RCAM_AF_CONN	PP2V5_RCAM_AF_CONN - @single_brd_lib.SINGLE_BRD	21C4 23C3
PP2V80_THROTTLER	PP2V80_THROTTLER - @single_brd_lib.SINGLE_BRD	12A3 16B3 23B5
PP2V80_THROTTLER_FB	PP2V80_THROTTLER_FB - @single_brd_lib.SINGLE_BRD	12A3 16B3 23B5
PP2V85_CAM_LDO_OUT	PP2V85_CAM_LDO_OUT - @single_brd_lib.SINGLE_BRD	11D2 21B6 23B5
PP2V85_FCAM_CONN	PP2V85_FCAM_CONN - @single_brd_lib.SINGLE_BRD	11C4 23C3
PP2V85_RCAM_CONN	PP2V85_RCAM_CONN - @single_brd_lib.SINGLE_BRD	21B4 23C3
PP3V0_ACC	PP3V0_ACC - @single_brd_lib.SINGLE_BRD	12A2 16D3 23C3
PP3V0_ALS	PP3V0_ALS - @single_brd_lib.SINGLE_BRD	11C5 23C3
PP3V0_COMP	PP3V0_COMP - @single_brd_lib.SINGLE_BRD	20B7 23C3
PP3V0_IMU	PP3V0_IMU - @single_brd_lib.SINGLE_BRD	12A2 20B7 20C3 20D3 23C3
PP3V0_NAND	PP3V0_NAND - @single_brd_lib.SINGLE_BRD	6D1 12A2 23C3
PP3V0_NAVAJO	PP3V0_NAVAJO - @single_brd_lib.SINGLE_BRD	12A2 17D1 17D8 23C3
PP3V0_NAVAJO_CONN	PP3V0_NAVAJO_CONN - @single_brd_lib.SINGLE_BRD	17C4 23C3
PP3V0_PROX	PP3V0_PROX - @single_brd_lib.SINGLE_BRD	11C6 23C3

PP3V0_PROX_ALS	PP3V0_PROX_ALS - @single_brd_lib.SINGLE_BRD	11B8 11C8 12A2 23C3
PP3V0_PROX_IRLED	PP3V0_PROX_IRLED - @single_brd_lib.SINGLE_BRD	11A2 12A2 23C3
PP3V0_SDRAM	PP3V0_SDRAM - @single_brd_lib.SINGLE_BRD	12A2 14B3 16D6 23C3
PP3V3_USB	PP3V3_USB - @single_brd_lib.SINGLE_BRD	2C3 12B2 23B3
PP5V0_USB_CONN	PP5V0_USB_CONN - @single_brd_lib.SINGLE_BRD	17A6 22D5 23B3
PP5V0_USB_PROT	PP5V0_USB_PROT - @single_brd_lib.SINGLE_BRD	12D8 16D1 17A8 23B3
PP5V1_GRAPE_VDDH	PP5V1_GRAPE_VDDH - @single_brd_lib.SINGLE_BRD	14C3 18D7 23B3
PP5V7_LCM_AVDDH	PP5V7_LCM_AVDDH - @single_brd_lib.SINGLE_BRD	14C3 19D2 23B3
PP5V7_LCM_AVDDH_CONN	PP5V7_LCM_AVDDH_CONN - @single_brd_lib.SINGLE_BRD	19C5 23B3
PP5V7_SAGE_AVDDH	PP5V7_SAGE_AVDDH - @single_brd_lib.SINGLE_BRD	14C3 18B4 18D3 23B4
PP6V0_LCM_BOOST	PP6V0_LCM_BOOST - @single_brd_lib.SINGLE_BRD	14C4 23B4
PP16V5_MESA	PP16V5_MESA - @single_brd_lib.SINGLE_BRD	14B1 17D7 23C5
PP16V5_MESA_DOCK_CONN	PP16V5_MESA_DOCK_CONN - @single_brd_lib.SINGLE_BRD	17C5 23C5
PP_BATT_VCC	PP_BATT_VCC - @single_brd_lib.SINGLE_BRD	12C8 15B7 15D7 22C4 22D4 22D4 22D5 22D5 22D8 23B4 24D6
	PP_BATT_VCC_CONN - @single_brd_lib.RADIO_MLB(i616_page 24)	35D1 35D8 36C8 44C6 45C6 46C6 47C6 48C6 49C6 50C8
PP_BATT_VCC_L19_VP	PP_BATT_VCC_L19_VP - @single_brd_lib.SINGLE_BRD	15D6 23B4
PP_BUCK0_LX0	PP_BUCK0_LX0 - @single_brd_lib.SINGLE_BRD	12D5 23B4
PP_BUCK0_LX1	PP_BUCK0_LX1 - @single_brd_lib.SINGLE_BRD	12D5 23B4
PP_BUCK0_LX2	PP_BUCK0_LX2 - @single_brd_lib.SINGLE_BRD	12C5 23B4
PP_BUCK0_LX3	PP_BUCK0_LX3 - @single_brd_lib.SINGLE_BRD	12C5 23B4
PP_BUCK1_LX0	PP_BUCK1_LX0 - @single_brd_lib.SINGLE_BRD	12C5 23B4
PP_BUCK1_LX1	PP_BUCK1_LX1 - @single_brd_lib.SINGLE_BRD	12C5 23B4
PP_BUCK2_LX	PP_BUCK2_LX - @single_brd_lib.SINGLE_BRD	12C5 23B4
PP_BUCK3_LX	PP_BUCK3_LX - @single_brd_lib.SINGLE_BRD	12C5 23B4
PP_BUCK4_LX	PP_BUCK4_LX - @single_brd_lib.SINGLE_BRD	12B5 23A4
PP_BUCK5_LX	PP_BUCK5_LX - @single_brd_lib.SINGLE_BRD	12B5 23A4
PP_CHESTNUT_CN	PP_CHESTNUT_CN - @single_brd_lib.SINGLE_BRD	14D4 23A4
PP_CHESTNUT_CP	PP_CHESTNUT_CP - @single_brd_lib.SINGLE_BRD	14D4 23A4
PP_CHESTNUT_LXP	PP_CHESTNUT_LXP - @single_brd_lib.SINGLE_BRD	14D6 23A4
PP_CODEC_FILT+	PP_CODEC_FILT+ - @single_brd_lib.SINGLE_BRD	10B5 23A4
PP_CODEC_SPKR_VQ	PP_CODEC_SPKR_VQ - @single_brd_lib.SINGLE_BRD	10B5 23A4
PP_CODEC_TO_MIC1_BIAS	PP_CODEC_TO_MIC1_BIAS - @single_brd_lib.SINGLE_BRD	10B7 17B8 23A4
PP_CODEC_TO_MIC1_BIAS_CONN	PP_CODEC_TO_MIC1_BIAS_CONN - @single_brd_lib.SINGLE_BRD	17B6 23A4
PP_CODEC_TO_MIC2_3_BIAS	PP_CODEC_TO_MIC2_3_BIAS - @single_brd_lib.SINGLE_BRD	8C2 10B7 11B2 23A4
PP_CODEC_TO_MIC3_BIAS_CONN	PP_CODEC_TO_MIC3_BIAS_CONN - @single_brd_lib.SINGLE_BRD	11C4 23A4
PP_CODEC_VCPFILT+	PP_CODEC_VCPFILT+ - @single_brd_lib.SINGLE_BRD	10C5 23A4
PP_CODEC_VCPFILT-	PP_CODEC_VCPFILT- - @single_brd_lib.SINGLE_BRD	10B5 23A4
PP_CODEC_VHP_FLYC	PP_CODEC_VHP_FLYC - @single_brd_lib.SINGLE_BRD	10C5 23D2
PP_CODEC_VHP_FLYN	PP_CODEC_VHP_FLYN - @single_brd_lib.SINGLE_BRD	10C5 23D2
PP_CODEC_VHP_FLYP	PP_CODEC_VHP_FLYP - @single_brd_lib.SINGLE_BRD	10C5 23D2
PP_CUMULUS_VDDANA	PP_CUMULUS_VDDANA - @single_brd_lib.SINGLE_BRD	18C7 23D2
PP_CUMULUS_VDDCORE	PP_CUMULUS_VDDCORE - @single_brd_lib.SINGLE_BRD	18C7 23D2
PP_E75_TO_TRISTAR_ACC1	PP_E75_TO_TRISTAR_ACC1 - @single_brd_lib.SINGLE_BRD	16D2 17A1 23D2
PP_E75_TO_TRISTAR_ACC1_CONN	PP_E75_TO_TRISTAR_ACC1_CONN - @single_brd_lib.SINGLE_BRD	17B4 22C3 22C3 23D2
PP_E75_TO_TRISTAR_ACC2	PP_E75_TO_TRISTAR_ACC2 - @single_brd_lib.SINGLE_BRD	16D2 17A1 23D2
PP_E75_TO_TRISTAR_ACC2_CONN	PP_E75_TO_TRISTAR_ACC2_CONN - @single_brd_lib.SINGLE_BRD	17B4 22C3 23D2
PP_EXTMIC_BIAS	PP_EXTMIC_BIAS - @single_brd_lib.SINGLE_BRD	10B7 23D2
PP_EXTMIC_BIAS_FILT	PP_EXTMIC_BIAS_FILT - @single_brd_lib.SINGLE_BRD	10B7 23D2
PP_EXTMIC_BIAS_FILT_IN	PP_EXTMIC_BIAS_FILT_IN - @single_brd_lib.SINGLE_BRD	10B7 23D2
PP_EXTMIC_BIAS_IN	PP_EXTMIC_BIAS_IN - @single_brd_lib.SINGLE_BRD	10B7 23D2
PP_L19_VBOOST	PP_L19_VBOOST - @single_brd_lib.SINGLE_BRD	15D6 23D2
PP_LCM_BL_ANODE	PP_LCM_BL_ANODE - @single_brd_lib.SINGLE_BRD	14B5 19B2 23D2
PP_LCM_BL_ANODE_CONN	PP_LCM_BL_ANODE_CONN - @single_brd_lib.SINGLE_BRD	19C5 22A5 23D2
PP_LCM_BL_CAT1	PP_LCM_BL_CAT1 - @single_brd_lib.SINGLE_BRD	14B6 19A2 23C2
PP_LCM_BL_CAT1_CONN	PP_LCM_BL_CAT1_CONN - @single_brd_lib.SINGLE_BRD	19C5 22A5 23C2
PP_LCM_BL_CAT2	PP_LCM_BL_CAT2 - @single_brd_lib.SINGLE_BRD	14B6 19A2 23C2
PP_LCM_BL_CAT2_CONN	PP_LCM_BL_CAT2_CONN - @single_brd_lib.SINGLE_BRD	19C5 22A5 23C2
PP_LDO14_2P65	PP_LDO14_2P65 - @single_brd_lib.SINGLE_BRD	17A7 23C2 24D6
	PP_LDO14_2V65 - @single_brd_lib.RADIO_MLB(i616_page 24)	35B8 36B1 43C8 50C8 51C6 53D3
PP_LED_BOOST_OUT	PP_LED_BOOST_OUT - @single_brd_lib.SINGLE_BRD	15B5 23C2
PP_LED_DRV_LX	PP_LED_DRV_LX -	15B5 23C2

	@single_brd_lib.SINGLE_BRD	
PP_MIPI0D_VREG	PP_MIPI0D_VREG - @single_brd_lib.SINGLE_BRD	7D6 23C2
PP_MIPI1D_VREG	PP_MIPI1D_VREG - @single_brd_lib.SINGLE_BRD	7D6 23B2
PP_PMU_TO_VIBE	PP_PMU_TO_VIBE - @single_brd_lib.SINGLE_BRD	8C7 12B7 23B2
PP_PMU_TO_VIBE_CONN	PP_PMU_TO_VIBE_CONN - @single_brd_lib.SINGLE_BRD	8C6 23B2
PP_PMU_VCENTER	PP_PMU_VCENTER - @single_brd_lib.SINGLE_BRD	12D7 23B2
PP_PMU_VDD_REF	PP_PMU_VDD_REF - @single_brd_lib.SINGLE_BRD	13C4 23B2
PP_PMU_VDD_RTC	PP_PMU_VDD_RTC - @single_brd_lib.SINGLE_BRD	13C4 23B2
PP_PMU_VREF	PP_PMU_VREF - @single_brd_lib.SINGLE_BRD	13C4 23B2
PP_PMU_VSW_CHG	PP_PMU_VSW_CHG - @single_brd_lib.SINGLE_BRD	12C7 23B2
PP_SAGE_LX	PP_SAGE_LX - @single_brd_lib.SINGLE_BRD	18B3 23B2
PP_SAGE_LY	PP_SAGE_LY - @single_brd_lib.SINGLE_BRD	18B3 23B2
PP_SAGE_TO_TOUCH_VCPH	PP_SAGE_TO_TOUCH_VCPH - @single_brd_lib.SINGLE_BRD	18A8 18D3 23B2
PP_SAGE_TO_TOUCH_VCPL	PP_SAGE_TO_TOUCH_VCPL - @single_brd_lib.SINGLE_BRD	18A8 18D5 19C7 23B2
PP_SAGE_VBST_OUTH	PP_SAGE_VBST_OUTH - @single_brd_lib.SINGLE_BRD	18B3 23B2
PP_SAGE_VBST_OUTL	PP_SAGE_VBST_OUTL - @single_brd_lib.SINGLE_BRD	18B3 23B2
PP_SAGE_VCPL_F	PP_SAGE_VCPL_F - @single_brd_lib.SINGLE_BRD	18D1 23B2
PP_SPKAMP_FILT	PP_SPKAMP_FILT - @single_brd_lib.SINGLE_BRD	15C5 23A2
PP_SPKAMP_LDO_FILT	PP_SPKAMP_LDO_FILT - @single_brd_lib.SINGLE_BRD	15C5 23A2
PP_SPKAMP_SW	PP_SPKAMP_SW - @single_brd_lib.SINGLE_BRD	15C6 23A2
PP_STRB_DRIVER_TO_LED_COOL	PP_STRB_DRIVER_TO_LED_COOL - @single_brd_lib.SINGLE_BRD	8B2 15A3 23A2
PP_STRB_DRIVER_TO_LED_WARM	PP_STRB_DRIVER_TO_LED_WARM - @single_brd_lib.SINGLE_BRD	8D7 15A3 23A2
PP_VCC_MAIN	PP_VCC_MAIN - @single_brd_lib.SINGLE_BRD	10D7 12A8 12B7 12C8 13C2 14B4 14B8 14D6 21B7 23A2 24D6
	PP_VCC_MAIN_WLAN - @single_brd_lib.RADIO_MLB(i616_page 24)	35D8 56D6
PP_VCC_MAIN_CODEC	PP_VCC_MAIN_CODEC - @single_brd_lib.SINGLE_BRD	10D7 23A2
PP_VCC_MAIN_UVLO_SENSE	PP_VCC_MAIN_UVLO_SENSE - @single_brd_lib.SINGLE_BRD	12C7 16B5 23B5
PP_WLED_LX	PP_WLED_LX - @single_brd_lib.SINGLE_BRD	14B7 23A2
RADIO_TO_PMU_ADC_LDO6_RUIM_1V8	RADIO_TO_PMU_ADC_LDO6_RUIM_1V8 - @single_brd_lib.SINGLE_BRD	13C6 24C6
	ADC_LDO6_RUIM_1V8 - @single_brd_lib.RADIO_MLB(i616_page 24)	35A7 35B8
RADIO_TO_PMU_ADC_LVS1	RADIO_TO_PMU_ADC_LVS1 - @single_brd_lib.SINGLE_BRD	13C6 24C6
	ADC_LVS1 - @single_brd_lib.RADIO_MLB(i616_page 24)	35A7 35A8
RADIO_TO_PMU_ADC_SMPS1_MSMC_1V05	RADIO_TO_PMU_ADC_SMPS1_MSMC_1V05 - @single_brd_lib.SINGLE_BRD	13C6 24C6
	ADC_SMPS1_MSMC_1V05 - @single_brd_lib.RADIO_MLB(i616_page 24)	35A7 35B8
RADIO_TO_PMU_ADC_SMPS3_MSME_1V8	RADIO_TO_PMU_ADC_SMPS3_MSME_1V8 - @single_brd_lib.SINGLE_BRD	13C6 24C6
	ADC_SMPS3_MSME_1V8 - @single_brd_lib.RADIO_MLB(i616_page 24)	35A7 35B8
RCAM_TO_LEDDRV_STROBE_EN	RCAM_TO_LEDDRV_STROBE_EN - @single_brd_lib.SINGLE_BRD	15A6 21A7
RCAM_TO_LEDDRV_STROBE_EN_CONN	RCAM_TO_LEDDRV_STROBE_EN_CONN - @single_brd_lib.SINGLE_BRD	21B4
RCAM_TO_STROBE_NTC	RCAM_TO_STROBE_NTC - @single_brd_lib.SINGLE_BRD	8D2 15A3
RCAM_TO_STROBE_NTC_CONN	RCAM_TO_STROBE_NTC_CONN - @single_brd_lib.SINGLE_BRD	8D3
RCVR_TO_CODEC_RCVR_TEST	RCVR_TO_CODEC_RCVR_TEST - @single_brd_lib.SINGLE_BRD	9A7 11A7 23B7
RCVR_TO_CODEC_RCVR_TEST_L67	RCVR_TO_CODEC_RCVR_TEST_L67 - @single_brd_lib.SINGLE_BRD	9C5 23B7
RESET_1V8_L	RESET_1V8_L - @single_brd_lib.SINGLE_BRD	2B7 4D8 13B6 14C6 16C2 19B2 22B4 24D6
	RF_RESET_L - @single_brd_lib.RADIO_MLB(i616_page 24)	35C3 35D8
REVERSE_GATE	REVERSE_GATE - @single_brd_lib.SINGLE_BRD	17A7
SAGE_TO_CUMULUS_IN<0>	SAGE_TO_CUMULUS_IN<0> - @single_brd_lib.SINGLE_BRD	18C1 18C7 23C5
SAGE_TO_CUMULUS_IN<1>	SAGE_TO_CUMULUS_IN<1> - @single_brd_lib.SINGLE_BRD	18C1 18C7 23C5
SAGE_TO_CUMULUS_IN<2>	SAGE_TO_CUMULUS_IN<2> - @single_brd_lib.SINGLE_BRD	18C1 18C7 23C5
SAGE_TO_CUMULUS_IN<3>	SAGE_TO_CUMULUS_IN<3> - @single_brd_lib.SINGLE_BRD	18C7 18D1 23C5
SAGE_TO_CUMULUS_IN<4>	SAGE_TO_CUMULUS_IN<4> - @single_brd_lib.SINGLE_BRD	18C7 18D1 23C5
SAGE_TO_CUMULUS_IN<5>	SAGE_TO_CUMULUS_IN<5> - @single_brd_lib.SINGLE_BRD	18C7 18D1 23C5
SAGE_TO_CUMULUS_IN<6>	SAGE_TO_CUMULUS_IN<6> - @single_brd_lib.SINGLE_BRD	18C1 18C7 23C5
SAGE_TO_CUMULUS_IN<7>	SAGE_TO_CUMULUS_IN<7> - @single_brd_lib.SINGLE_BRD	18C1 18C7 23C5
SAGE_TO_CUMULUS_IN<8>	SAGE_TO_CUMULUS_IN<8> - @single_brd_lib.SINGLE_BRD	18C1 18C7 23C5
SAGE_TO_CUMULUS_IN<9>	SAGE_TO_CUMULUS_IN<9> - @single_brd_lib.SINGLE_BRD	18C1 18C7 23C5
SAGE_TO_CUMULUS_IN<10>	SAGE_TO_CUMULUS_IN<10> - @single_brd_lib.SINGLE_BRD	18C1 18C7 23C5
SAGE_TO_CUMULUS_IN<11>	SAGE_TO_CUMULUS_IN<11> - @single_brd_lib.SINGLE_BRD	18C1 18C7 23C5
SAGE_TO_CUMULUS_IN<12>	SAGE_TO_CUMULUS_IN<12> - @single_brd_lib.SINGLE_BRD	18B7 18C1 23C5
SAGE_TO_CUMULUS_IN<13>	SAGE_TO_CUMULUS_IN<13> - @single_brd_lib.SINGLE_BRD	18C1 18C7 23C5
SAGE_TO_CUMULUS_IN<14>	SAGE_TO_CUMULUS_IN<14> - @single_brd_lib.SINGLE_BRD	18C1 18C7 23C5

SAGE_TO_TOUCH_VCPH_REF	SAGE_TO_TOUCH_VCPH_REF - @single_brd_lib.SINGLE_BRD	18A7 18B4
SAGE_TO_TOUCH_VCPL_REF	SAGE_TO_TOUCH_VCPL_REF - @single_brd_lib.SINGLE_BRD	18A7 18B4
SAGE_TO_TOUCH_VSTM_OUT<0>	SAGE_TO_TOUCH_VSTM_OUT<0> - @single_brd_lib.SINGLE_BRD	18A7 18A8 18B1 23C8
SAGE_TO_TOUCH_VSTM_OUT<1>	SAGE_TO_TOUCH_VSTM_OUT<1> - @single_brd_lib.SINGLE_BRD	18A8 18C1 23C8
SAGE_TO_TOUCH_VSTM_OUT<2>	SAGE_TO_TOUCH_VSTM_OUT<2> - @single_brd_lib.SINGLE_BRD	18A8 18B1 23B8
SAGE_TO_TOUCH_VSTM_OUT<3>	SAGE_TO_TOUCH_VSTM_OUT<3> - @single_brd_lib.SINGLE_BRD	18A8 18B1 23B8
SAGE_TO_TOUCH_VSTM_OUT<4>	SAGE_TO_TOUCH_VSTM_OUT<4> - @single_brd_lib.SINGLE_BRD	18A8 18C1 23B8
SAGE_TO_TOUCH_VSTM_OUT<5>	SAGE_TO_TOUCH_VSTM_OUT<5> - @single_brd_lib.SINGLE_BRD	18A8 18C1 23B8
SAGE_TO_TOUCH_VSTM_OUT<6>	SAGE_TO_TOUCH_VSTM_OUT<6> - @single_brd_lib.SINGLE_BRD	18A8 18C1 23B8
SAGE_TO_TOUCH_VSTM_OUT<7>	SAGE_TO_TOUCH_VSTM_OUT<7> - @single_brd_lib.SINGLE_BRD	18A8 18C1 23B8
SAGE_TO_TOUCH_VSTM_OUT<8>	SAGE_TO_TOUCH_VSTM_OUT<8> - @single_brd_lib.SINGLE_BRD	18A8 18C1 23B8
SAGE_TO_TOUCH_VSTM_OUT<9>	SAGE_TO_TOUCH_VSTM_OUT<9> - @single_brd_lib.SINGLE_BRD	18A8 18C1 23B8
SAGE_TO_TOUCH_VSTM_OUT<10>	SAGE_TO_TOUCH_VSTM_OUT<10> - @single_brd_lib.SINGLE_BRD	18A8 18C1 23B8
SAGE_TO_TOUCH_VSTM_OUT<11>	SAGE_TO_TOUCH_VSTM_OUT<11> - @single_brd_lib.SINGLE_BRD	18A7 18B1 23B8
SAGE_TO_TOUCH_VSTM_OUT<12>	SAGE_TO_TOUCH_VSTM_OUT<12> - @single_brd_lib.SINGLE_BRD	18A7 18C1 23B8
SAGE_TO_TOUCH_VSTM_OUT<13>	SAGE_TO_TOUCH_VSTM_OUT<13> - @single_brd_lib.SINGLE_BRD	18A7 18C1 23B8
SAGE_TO_TOUCH_VSTM_OUT<14>	SAGE_TO_TOUCH_VSTM_OUT<14> - @single_brd_lib.SINGLE_BRD	18A7 18C1 23B8
SAGE_TO_TOUCH_VSTM_OUT<15>	SAGE_TO_TOUCH_VSTM_OUT<15> - @single_brd_lib.SINGLE_BRD	18A7 18C1 23B8
SAGE_TO_TOUCH_VSTM_OUT<16>	SAGE_TO_TOUCH_VSTM_OUT<16> - @single_brd_lib.SINGLE_BRD	18A7 18B1 23B8
SAGE_TO_TOUCH_VSTM_OUT<17>	SAGE_TO_TOUCH_VSTM_OUT<17> - @single_brd_lib.SINGLE_BRD	18A7 18B1 23B8
SAGE_TO_TOUCH_VSTM_OUT<18>	SAGE_TO_TOUCH_VSTM_OUT<18> - @single_brd_lib.SINGLE_BRD	18A7 18C1 23B8
SAGE_TO_TOUCH_VSTM_OUT<19>	SAGE_TO_TOUCH_VSTM_OUT<19> - @single_brd_lib.SINGLE_BRD	18A7 18C1 23B8
SAGE_VBIAS	SAGE_VBIAS - @single_brd_lib.SINGLE_BRD	18B3 23D5
SOCHOT0	SOCHOT0 - @single_brd_lib.SINGLE_BRD	3C2 16A2
SPKAMP_IREF	SPKAMP_IREF - @single_brd_lib.SINGLE_BRD	15C5
SPKAMP_TO_AP_INT_L	SPKAMP_TO_AP_INT_L - @single_brd_lib.SINGLE_BRD	3D8 15C6
SPKAMP_TO_SPEAKER_OUT_CONN_N	SPKAMP_TO_SPEAKER_OUT_CONN_N - @single_brd_lib.SINGLE_BRD	15C1 17A7 22A3 23D5
SPKAMP_TO_SPEAKER_OUT_CONN_P	SPKAMP_TO_SPEAKER_OUT_CONN_P - @single_brd_lib.SINGLE_BRD	15C1 17A7 17C5 22A3 23D5
SPKAMP_TO_SPEAKER_OUT_N	SPKAMP_TO_SPEAKER_OUT_N - @single_brd_lib.SINGLE_BRD	15C5 23D5
SPKAMP_TO_SPEAKER_OUT_P	SPKAMP_TO_SPEAKER_OUT_P - @single_brd_lib.SINGLE_BRD	15C5 23D5
THROTTLER_OUT	THROTTLER_OUT - @single_brd_lib.SINGLE_BRD	16A3
TOUCH_TO_AP_INT_L	TOUCH_TO_AP_INT_L - @single_brd_lib.SINGLE_BRD	3C8 18B8
TOUCH_TO_AP_SPI1_MISO	TOUCH_TO_AP_SPI1_MISO - @single_brd_lib.SINGLE_BRD	3B4 18B8
TOUCH_TO_AP_SPI1_MISO_R	TOUCH_TO_AP_SPI1_MISO_R - @single_brd_lib.SINGLE_BRD	18B7
TOUCH_TO_SAGE_SENSE_IN<0>	TOUCH_TO_SAGE_SENSE_IN<0> - @single_brd_lib.SINGLE_BRD	18A8 18C3 23C8
TOUCH_TO_SAGE_SENSE_IN<1>	TOUCH_TO_SAGE_SENSE_IN<1> - @single_brd_lib.SINGLE_BRD	18A8 18C3 23C8
TOUCH_TO_SAGE_SENSE_IN<2>	TOUCH_TO_SAGE_SENSE_IN<2> - @single_brd_lib.SINGLE_BRD	18A8 18C3 23C8
TOUCH_TO_SAGE_SENSE_IN<3>	TOUCH_TO_SAGE_SENSE_IN<3> - @single_brd_lib.SINGLE_BRD	18A8 18D3 23C8
TOUCH_TO_SAGE_SENSE_IN<4>	TOUCH_TO_SAGE_SENSE_IN<4> - @single_brd_lib.SINGLE_BRD	18A8 18D3 23C8
TOUCH_TO_SAGE_SENSE_IN<5>	TOUCH_TO_SAGE_SENSE_IN<5> - @single_brd_lib.SINGLE_BRD	18A8 18D3 23C8
TOUCH_TO_SAGE_SENSE_IN<6>	TOUCH_TO_SAGE_SENSE_IN<6> - @single_brd_lib.SINGLE_BRD	18A7 18C3 23C8
TOUCH_TO_SAGE_SENSE_IN<7>	TOUCH_TO_SAGE_SENSE_IN<7> - @single_brd_lib.SINGLE_BRD	18A7 18C3 23C8
TOUCH_TO_SAGE_SENSE_IN<8>	TOUCH_TO_SAGE_SENSE_IN<8> - @single_brd_lib.SINGLE_BRD	18A7 18C3 23C8
TOUCH_TO_SAGE_SENSE_IN<9>	TOUCH_TO_SAGE_SENSE_IN<9> - @single_brd_lib.SINGLE_BRD	18A7 18C3 23C8
TOUCH_TO_SAGE_SENSE_IN<10>	TOUCH_TO_SAGE_SENSE_IN<10> - @single_brd_lib.SINGLE_BRD	18A8 18C3 23C8
TOUCH_TO_SAGE_SENSE_IN<11>	TOUCH_TO_SAGE_SENSE_IN<11> - @single_brd_lib.SINGLE_BRD	18A8 18C3 23C8
TOUCH_TO_SAGE_SENSE_IN<12>	TOUCH_TO_SAGE_SENSE_IN<12> - @single_brd_lib.SINGLE_BRD	18A7 18C3 23C8
TOUCH_TO_SAGE_SENSE_IN<13>	TOUCH_TO_SAGE_SENSE_IN<13> - @single_brd_lib.SINGLE_BRD	18A7 18C3 23C8
TOUCH_TO_SAGE_SENSE_IN<14>	TOUCH_TO_SAGE_SENSE_IN<14> - @single_brd_lib.SINGLE_BRD	18A7 18C3 23C8
TOUCH_TO_SAGE_VCM_IN	TOUCH_TO_SAGE_VCM_IN - @single_brd_lib.SINGLE_BRD	18A7 18B1
TRISTAR_BI_AP_JTAG_SWDIO	TRISTAR_BI_AP_JTAG_SWDIO - @single_brd_lib.SINGLE_BRD	2B6 16C4
TRISTAR_BYPASS	TRISTAR_BYPASS - @single_brd_lib.SINGLE_BRD	16C3 23D5
TRISTAR_TO_AP_ACC_UART6_RXD	TRISTAR_TO_AP_ACC_UART6_RXD - @single_brd_lib.SINGLE_BRD	3B5 16C4
TRISTAR_TO_AP_DEBUG_UART0_RXD	TRISTAR_TO_AP_DEBUG_UART0_RXD - @single_brd_lib.SINGLE_BRD	3C5 16C4
TRISTAR_TO_AP_INT	TRISTAR_TO_AP_INT - @single_brd_lib.SINGLE_BRD	3C5 13B4 16C2
TRISTAR_TO_AP_JTAG_SWCLK	TRISTAR_TO_AP_JTAG_SWCLK - @single_brd_lib.SINGLE_BRD	2B6 16C4
TRISTAR_TO_PMU_HOST_RESET	TRISTAR_TO_PMU_HOST_RESET - @single_brd_lib.SINGLE_BRD	13B6 16C1
TRISTAR_TO_PMU_MIKEYBUS_TEST_NEG	TRISTAR_TO_PMU_MIKEYBUS_TEST_NEG - @single_brd_lib.SINGLE_BRD	13C6 16C6 23C7
TRISTAR_TO_PMU_MIKEYBUS_TEST_POS	TRISTAR_TO_PMU_MIKEYBUS_TEST_POS - @single_brd_lib.SINGLE_BRD	13C6 16D6 23C7
TRISTAR_TO_PMU_OVP_SW_EN_L	TRISTAR_TO_PMU_OVP_SW_EN_L - @single_brd_lib.SINGLE_BRD	12D7 16C1 23B7
TRISTAR_TO_PMU_USB_BRICKID	TRISTAR_TO_PMU_USB_BRICKID - @single_brd_lib.SINGLE_BRD	13C2 16C4 23A7
TRISTAR_TO_PMU_USB_BRICKID_R	TRISTAR_TO_PMU_USB_BRICKID_R - @single_brd_lib.SINGLE_BRD	13C4 13C6 23A7

FOXCONN RD-EE

U12_GPIO_3	U12_GPIO_3 - @single_brd_lib.SINGLE_BRD	18B6
U160_IN_NEG	U160_IN_NEG - @single_brd_lib.SINGLE_BRD	16A4
U160_IN_POS	U160_IN_POS - @single_brd_lib.SINGLE_BRD	16A4
U160_REF	U160_REF - @single_brd_lib.SINGLE_BRD	16A3 16A5
USB_CONN_SNUB	USB_CONN_SNUB - @single_brd_lib.SINGLE_BRD	17A6
USB_REXT	USB_REXT - @single_brd_lib.SINGLE_BRD	2B4
USB_VBUS_DETECT	USB_VBUS_DETECT - @single_brd_lib.SINGLE_BRD	2B3 12D8 23A7
WLAN_TO_AP_HSIC2_RDY	WLAN_TO_AP_HSIC2_RDY - @single_brd_lib.SINGLE_BRD	3C2 24B6
	WLAN_HSIC3_DEVICE_RDY - @single_brd_lib.RADIO_MLB(i616_page 24)	35C6 35C8 56B3
WLAN_TO_AP_HSIC2_REMOTE_WAKE	WLAN_TO_AP_HSIC2_REMOTE_WAKE - @single_brd_lib.SINGLE_BRD	3C2 24B6
	WLAN_HSIC3_RESUME - @single_brd_lib.RADIO_MLB(i616_page 24)	35C6 35D8 56B3
WLAN_TO_AP_UART3_RXD	WLAN_TO_AP_UART3_RXD - @single_brd_lib.SINGLE_BRD	3C5 24C6
	WLAN_UART_TXD - @single_brd_lib.RADIO_MLB(i616_page 24)	35C8 56B3
WLAN_TO_PMU_HOST_WAKE	WLAN_TO_PMU_HOST_WAKE - @single_brd_lib.SINGLE_BRD	13B4 24C6
	HOST_WAKE_WLAN - @single_brd_lib.RADIO_MLB(i616_page 24)	35C8 56B3

Base nets and synonyms for single_brd_lib.RADIO_MLB(@single_brd_lib.single_brd(sch_1):page24_i616@radio_mlb_lib.radio_mlb(sch_1))

Base Signal	Synonyms	Location([Zone][dir])
2G_FEM_S0	2G_FEM_S0 - @single_brd_lib.RADIO_MLB	39C2 50C3
2G_FEM_S1	2G_FEM_S1 - @single_brd_lib.RADIO_MLB	35C1 39C2 50C3
2G_FEM_S2	2G_FEM_S2 - @single_brd_lib.RADIO_MLB	39C2 43C8 50C3
2G_FEM_S3	2G_FEM_S3 - @single_brd_lib.RADIO_MLB	39C2 43C8 50C3
2G_FEM_S4	2G_FEM_S4 - @single_brd_lib.RADIO_MLB	35C3 39C2 50C3
2G_FEM_S5	2G_FEM_S5 - @single_brd_lib.RADIO_MLB	39C2 50C3
2G_FEM_S6	2G_FEM_S6 - @single_brd_lib.RADIO_MLB	39C2 43C8 50C3
19P2M_CLK_EN	19P2M_CLK_EN - @single_brd_lib.RADIO_MLB	37B2 38A5
19P2M_MDM	19P2M_MDM - @single_brd_lib.RADIO_MLB	35C6 37B2 38A5
19P2M_WTR	19P2M_WTR - @single_brd_lib.RADIO_MLB	37B2 40C5
19P2M_WTR_IN	19P2M_WTR_IN - @single_brd_lib.RADIO_MLB	40C4
19P2M_XTAL_IN	19P2M_XTAL_IN - @single_brd_lib.RADIO_MLB	37B4
19P2M_XTAL_OUT	19P2M_XTAL_OUT - @single_brd_lib.RADIO_MLB	37B4
50_2G_HB_PA_IN	50_2G_HB_PA_IN - @single_brd_lib.RADIO_MLB	50C6
50_2G_LB_PA_IN	50_2G_LB_PA_IN - @single_brd_lib.RADIO_MLB	50C6
50_B1_B4_ANT	50_B1_B4_ANT - @single_brd_lib.RADIO_MLB	44C2 50B7
50_B1_B4_DPLX_ANT	50_B1_B4_DPLX_ANT - @single_brd_lib.RADIO_MLB	44C3
50_B1_TX_PAD_IN	50_B1_TX_PAD_IN - @single_brd_lib.RADIO_MLB	44C6
50_B1_TX_SAW_IN	50_B1_TX_SAW_IN - @single_brd_lib.RADIO_MLB	42D4 43C8
50_B1_TX_SAW_OUT	50_B1_TX_SAW_OUT - @single_brd_lib.RADIO_MLB	43C6 44C7
50_B2_ANT	50_B2_ANT - @single_brd_lib.RADIO_MLB	45B2 50B7
50_B2_B25_TX_SAW_IN	50_B2_B25_TX_SAW_IN - @single_brd_lib.RADIO_MLB	42C4 43C8
50_B2_DPLX_ANT	50_B2_DPLX_ANT - @single_brd_lib.RADIO_MLB	45B3
50_B2_DUPLX_RX	50_B2_DUPLX_RX - @single_brd_lib.RADIO_MLB	42B8 45B5
50_B2_RX_BALUN	50_B2_RX_BALUN - @single_brd_lib.RADIO_MLB	42B7
50_B2_TX_PAD_IN	50_B2_TX_PAD_IN - @single_brd_lib.RADIO_MLB	45C6
50_B2_TX_SAW_OUT	50_B2_TX_SAW_OUT - @single_brd_lib.RADIO_MLB	43C6 45B7
50_B3_ANT	50_B3_ANT - @single_brd_lib.RADIO_MLB	45C2 50C4
50_B3_B4_TX_SAW_IN	50_B3_B4_TX_SAW_IN - @single_brd_lib.RADIO_MLB	42D4 43C8
50_B3_DPLX_ANT	50_B3_DPLX_ANT - @single_brd_lib.RADIO_MLB	45C3
50_B3_DUPLX_RX	50_B3_DUPLX_RX - @single_brd_lib.RADIO_MLB	42B8 45B5
50_B3_RX_BALUN	50_B3_RX_BALUN - @single_brd_lib.RADIO_MLB	42A7
50_B3_TX_PAD_IN	50_B3_TX_PAD_IN - @single_brd_lib.RADIO_MLB	45C6
50_B3_TX_SAW_OUT	50_B3_TX_SAW_OUT - @single_brd_lib.RADIO_MLB	43C6 45C7
50_B4_TX_PAD_IN	50_B4_TX_PAD_IN - @single_brd_lib.RADIO_MLB	44C6
50_B4_TX_SAW_OUT	50_B4_TX_SAW_OUT - @single_brd_lib.RADIO_MLB	43C6 44B7
50_B5_ANT	50_B5_ANT - @single_brd_lib.RADIO_MLB	47C2 50B7
50_B5_DPLX_ANT	50_B5_DPLX_ANT - @single_brd_lib.RADIO_MLB	47C3
50_B5_TX_PAD_IN	50_B5_TX_PAD_IN - @single_brd_lib.RADIO_MLB	47C6
50_B5_TX_SAW_OUT	50_B5_TX_SAW_OUT - @single_brd_lib.RADIO_MLB	43C2 47C7
50_B8_ANT	50_B8_ANT - @single_brd_lib.RADIO_MLB	47B2 50B7
50_B8_DPLX_ANT	50_B8_DPLX_ANT - @single_brd_lib.RADIO_MLB	47B3
50_B8_TX_PAD_IN	50_B8_TX_PAD_IN - @single_brd_lib.RADIO_MLB	47C6
50_B8_TX_SAW_OUT	50_B8_TX_SAW_OUT - @single_brd_lib.RADIO_MLB	43C2 47B7
50_B13_ANT	50_B13_ANT - @single_brd_lib.RADIO_MLB	48C1 50B7
50_B13_DPLX_ANT	50_B13_DPLX_ANT - @single_brd_lib.RADIO_MLB	48C3
50_B13_LPF_IN	50_B13_LPF_IN - @single_brd_lib.RADIO_MLB	48C3
50_B13_TX_PAD_IN	50_B13_TX_PAD_IN - @single_brd_lib.RADIO_MLB	48C6
50_B13_TX_SAW_OUT	50_B13_TX_SAW_OUT - @single_brd_lib.RADIO_MLB	43C2 48C7
50_B17_ANT	50_B17_ANT - @single_brd_lib.RADIO_MLB	48B2 50B7
50_B17_DPLX_ANT	50_B17_DPLX_ANT - @single_brd_lib.RADIO_MLB	48B3
50_B17_TX_PAD_IN	50_B17_TX_PAD_IN - @single_brd_lib.RADIO_MLB	48C6
50_B17_TX_SAW_OUT	50_B17_TX_SAW_OUT - @single_brd_lib.RADIO_MLB	43C2 48B7
50_B20_ANT	50_B20_ANT - @single_brd_lib.RADIO_MLB	46C2 50B7
50_B20_DPLX_ANT	50_B20_DPLX_ANT - @single_brd_lib.RADIO_MLB	46C3
50_B20_TX_PAD_IN	50_B20_TX_PAD_IN - @single_brd_lib.RADIO_MLB	46C6
50_B20_TX_SAW_OUT	50_B20_TX_SAW_OUT - @single_brd_lib.RADIO_MLB	43C2 46C7
50_COUPLER_TERM	50_COUPLER_TERM - @single_brd_lib.RADIO_MLB	50B2
50_DCS_RX	50_DCS_RX - @single_brd_lib.RADIO_MLB	43B5 50B7
50_DCS_RX_MATCH	50_DCS_RX_MATCH - @single_brd_lib.RADIO_MLB	43B5
50_DIVERSITY_SWITCH_MATCH	50_DIVERSITY_SWITCH_MATCH - @single_brd_lib.RADIO_MLB	51C6
50_DRX_ANT	50_DRX_ANT - @single_brd_lib.RADIO_MLB	50C4 51C7
50_GPS_ANT	50_GPS_ANT - @single_brd_lib.RADIO_MLB	52B7
50_GPS_ANT_FEED	50_GPS_ANT_FEED - @single_brd_lib.RADIO_MLB	52B5
50_GPS_LNA_MATCH	50_GPS_LNA_MATCH - @single_brd_lib.RADIO_MLB	52B6
50_GPS_LNA_OUT	50_GPS_LNA_OUT - @single_brd_lib.RADIO_MLB	51C5 52B3
50_HSIC_BB_DATA	50_AP_BI_BB_HSIC1_DATA - @single_brd_lib.SINGLE_BRD	2B6 24B6
	50_HSIC_BB_DATA - @single_brd_lib.RADIO_MLB	35B1 35B6 35C8 38B3
50_HSIC_BB_STROBE	50_AP_BI_BB_HSIC1_STB - @single_brd_lib.SINGLE_BRD	2B6 24B6
	50_HSIC_BB_STROBE - @single_brd_lib.RADIO_MLB	35B1 35B6 35C8 38B3
50_HSIC_CAL	50_HSIC_CAL - @single_brd_lib.RADIO_MLB	38B3
50_HSIC_WLAN_DATA	50_AP_BI_WLAN_HSIC2_DATA - @single_brd_lib.SINGLE_BRD	2B6 24B6
	50_HSIC_WLAN_DATA - @single_brd_lib.RADIO_MLB	35B6 35C8 56B6
50_HSIC_WLAN_STROBE	50_AP_BI_WLAN_HSIC2_STB - @single_brd_lib.SINGLE_BRD	2B6 24B6
	50_HSIC_WLAN_STROBE - @single_brd_lib.RADIO_MLB	35B6 35C8 56B6
50_LAT_5G_NOTCH	50_LAT_5G_NOTCH - @single_brd_lib.RADIO_MLB	50B3
50_LAT_ASM	50_LAT_ASM - @single_brd_lib.RADIO_MLB	50B4
50_LAT_COUPLER_IN	50_LAT_COUPLER_IN - @single_brd_lib.RADIO_MLB	50B1 50B3
50_LAT_LPF	50_LAT_LPF - @single_brd_lib.RADIO_MLB	50C3
50_LAT_TEST	50_LAT_TEST - @single_brd_lib.RADIO_MLB	50C1 53B7
50_NTCH_FILT_OUT	50_NTCH_FILT_OUT - @single_brd_lib.RADIO_MLB	53D7
50_PCS_RX	50_PCS_RX - @single_brd_lib.RADIO_MLB	43B5 50B7
50_PCS_RX_MATCH	50_PCS_RX_MATCH - @single_brd_lib.RADIO_MLB	43B5
50_PDET_IN	50_PDET_IN - @single_brd_lib.RADIO_MLB	40C3
50_PDET_PAD_IN	50_PDET_PAD_IN - @single_brd_lib.RADIO_MLB	40C1 50B3
50_PDET_PAD_OUT	50_PDET_PAD_OUT - @single_brd_lib.RADIO_MLB	40C2
50_UAT_ASM	50_UAT_ASM - @single_brd_lib.RADIO_MLB	50B4
50_UAT_COAX_DOWN	50_UAT_COAX_DOWN - @single_brd_lib.RADIO_MLB	53C4
50_UAT_LPF	50_UAT_LPF - @single_brd_lib.RADIO_MLB	50B3
50_UAT_TEST	50_UAT_TEST - @single_brd_lib.RADIO_MLB	50B1 53C2
50_UPPER_ANT_FEED	50_UPPER_ANT_FEED - @single_brd_lib.RADIO_MLB	53D8
50_UPPER_MCH_1	50_UPPER_MCH_1 - @single_brd_lib.RADIO_MLB	53D6
50_WLAN_A	50_WLAN_A - @single_brd_lib.RADIO_MLB	56C1 56D2
50_WLAN_ANT_FD	50_WLAN_ANT_FD - @single_brd_lib.RADIO_MLB	56D3
50_WLAN_ANT_MATCH	50_WLAN_ANT_MATCH - @single_brd_lib.RADIO_MLB	56D2
50_WLAN_ANT_MATCH_T	50_WLAN_ANT_MATCH_T - @single_brd_lib.RADIO_MLB	56D2
50_WLAN_A_ANT	50_WLAN_A_ANT - @single_brd_lib.RADIO_MLB	56C4
50_WLAN_G	50_WLAN_G - @single_brd_lib.RADIO_MLB	56C1 56D2
50_WLAN_G_ANT	50_WLAN_G_ANT - @single_brd_lib.RADIO_MLB	56C4
50_XCVR_2G_HB_TX	50_XCVR_2G_HB_TX - @single_brd_lib.RADIO_MLB	40D2 50B8
50_XCVR_2G_HB_TX_MATCH	50_XCVR_2G_HB_TX_MATCH - @single_brd_lib.RADIO_MLB	50B8
50_XCVR_2G_LB_TX	50_XCVR_2G_LB_TX - @single_brd_lib.RADIO_MLB	40D2 50C8
50_XCVR_2G_LB_TX_MATCH	50_XCVR_2G_LB_TX_MATCH - @single_brd_lib.RADIO_MLB	50C8
50_XCVR_B1_TX	50_XCVR_B1_TX - @single_brd_lib.RADIO_MLB	40D2 42D6
50_XCVR_B2_B25_TX	50_XCVR_B2_B25_TX - @single_brd_lib.RADIO_MLB	40D2 42C6
50_XCVR_B3_B4_TX	50_XCVR_B3_B4_TX - @single_brd_lib.RADIO_MLB	40D2 42D6
50_XCVR_B5_B18_TX	50_XCVR_B5_B18_TX - @single_brd_lib.RADIO_MLB	40D2 43C4
50_XCVR_B8_TX	50_XCVR_B8_TX - @single_brd_lib.RADIO_MLB	40D2 43C4
50_XCVR_B13_B17_B20_TX	50_XCVR_B13_B17_B20_TX - @single_brd_lib.RADIO_MLB	40D2 43C4
90_BB_USB_D_N	90_TRISTAR_BI_BB_USB_N - @single_brd_lib.SINGLE_BRD	16C4 24C6
	90_BB_USB_D_N - @single_brd_lib.RADIO_MLB	35C3 35C8 38A5
90_BB_USB_D_P	90_TRISTAR_BI_BB_USB_P - @single_brd_lib.SINGLE_BRD	16D4 24C6
	90_BB_USB_D_P - @single_brd_lib.RADIO_MLB	35C3 35C8 38A5
100_B1_B4_DUPLX_RX_N	100_B1_B4_DUPLX_RX_N - @single_brd_lib.RADIO_MLB	42B4 44B5
100_B1_B4_DUPLX_RX_P	100_B1_B4_DUPLX_RX_P - @single_brd_lib.RADIO_MLB	42C4 44B5
100_B5_B18_DUPLX_RX_N	100_B5_B18_DUPLX_RX_N - @single_brd_lib.RADIO_MLB	42B4 47B5
100_B5_B18_DUPLX_RX_P	100_B5_B18_DUPLX_RX_P - @single_brd_lib.RADIO_MLB	42B4 47B5
100_B8_DUPLX_RX_N	100_B8_DUPLX_RX_N - @single_brd_lib.RADIO_MLB	42A4 47B5
100_B8_DUPLX_RX_P	100_B8_DUPLX_RX_P - @single_brd_lib.RADIO_MLB	42A4 47B5
100_B13_DUPLX_RX_N	100_B13_DUPLX_RX_N - @single_brd_lib.RADIO_MLB	43C8 48B5
100_B13_DUPLX_RX_P	100_B13_DUPLX_RX_P - @single_brd_lib.RADIO_MLB	43C8 48B5
100_B17_DUPLX_RX_N	100_B17_DUPLX_RX_N - @single_brd_lib.RADIO_MLB	43C8 48B5
100_B17_DUPLX_RX_P	100_B17_DUPLX_RX_P - @single_brd_lib.RADIO_MLB	43C8 48B5
100_B20_DUPLX_RX_N	100_B20_DUPLX_RX_N - @single_brd_lib.RADIO_MLB	43B8 46B5
100_B20_DUPLX_RX_P	100_B20_DUPLX_RX_P - @single_brd_lib.RADIO_MLB	43B8 46B5
100_DCS_PCS_RX_FILTER_N	100_DCS_PCS_RX_FILTER_N - @single_brd_lib.RADIO_MLB	43B3
100_DCS_PCS_RX_FILTER_P	100_DCS_PCS_RX_FILTER_P - @single_brd_lib.RADIO_MLB	43B3
100_XCVR_B1_B4_DRX_N	100_XCVR_B1_B4_DRX_N - @single_brd_lib.RADIO_MLB	40C8 51C3
100_XCVR_B1_B4_DRX_P	100_XCVR_B1_B4_DRX_P - @single_brd_lib.RADIO_MLB	40C8 51C3
100_XCVR_B1_B4_PRX_N	100_XCVR_B1_B4_PRX_N - @single_brd_lib.RADIO_MLB	40C8 42C2
100_XCVR_B1_B4_PRX_P	100_XCVR_B1_B4_PRX_P - @single_brd_lib.RADIO_MLB	40C8 42B2
100_XCVR_B2_B25_B3_DRX_N	100_XCVR_B2_B25_B3_DRX_N - @single_brd_lib.RADIO_MLB	40C8 51B3
100_XCVR_B2_B25_B3_DRX_P	100_XCVR_B2_B25_B3_DRX_P - @single_brd_lib.RADIO_MLB	40C8 51B3
100_XCVR_B2_B25_PRX_N	100_XCVR_B2_B25_PRX_N - @single_brd_lib.RADIO_MLB	40C8 42B6
100_XCVR_B2_B25_PRX_P	100_XCVR_B2_B25_PRX_P - @single_brd_lib.RADIO_MLB	40D8 42B6
100_XCVR_B3_PRX_N	100_XCVR_B3_PRX_N - @single_brd_lib.RADIO_MLB	40C8 42B6
100_XCVR_B3_PRX_P	100_XCVR_B3_PRX_P - @single_brd_lib.RADIO_MLB	40C8 42A6
100_XCVR_B5_B18_B13_B17_DRX_N	100_XCVR_B5_B18_B13_B17_DRX_N - @single_brd_lib.RADIO_MLB	40C8 51B3
100_XCVR_B5_B18_B13_B17_DRX_P	100_XCVR_B5_B18_B13_B17_DRX_P - @single_brd_lib.RADIO_MLB	40C8 51B3
100_XCVR_B5_B18_PRX_N	100_XCVR_B5_B18_PRX_N - @single_brd_lib.RADIO_MLB	40D8 42B2
100_XCVR_B5_B18_PRX_P	100_XCVR_B5_B18_PRX_P - @single_brd_lib.RADIO_MLB	40D8 42B2
100_XCVR_B8_B20_DRX_N	100_XCVR_B8_B20_DRX_N - @single_brd_lib.RADIO_MLB	40C8 51B3
100_XCVR_B8_B20_DRX_P	100_XCVR_B8_B20_DRX_P - @single_brd_lib.RADIO_MLB	40C8 51B3
100_XCVR_B8_PRX_N	100_XCVR_B8_PRX_N - @single_brd_lib.RADIO_MLB	40D8 42A2
100_XCVR_B8_PRX_P	100_XCVR_B8_PRX_P - @single_brd_lib.RADIO_MLB	40D8 42A2
100_XCVR_B13_B17_B20_PRX_N	100_XCVR_B13_B17_B20_PRX_N - @single_brd_lib.RADIO_MLB	40D8 43C6
100_XCVR_B13_B17_B20_PRX_P	100_XCVR_B13_B17_B20_PRX_P - @single_brd_lib.RADIO_MLB	40D8 43C6
100_XCVR_DCS_PCS_PRX_N	100_XCVR_DCS_PCS_PRX_N - @single_brd_lib.RADIO_MLB	40C8 43B1
100_XCVR_DCS_PCS_PRX_P	100_XCVR_DCS_PCS_PRX_P - @single_brd_lib.RADIO_MLB	40C8 43B1
100_XCVR_GPS_RX_N	100_XCVR_GPS_RX_N - @single_brd_lib.RADIO_MLB	40B8 51C3
100_XCVR_GPS_RX_P	100_XCVR_GPS_RX_P - @single_brd_lib.RADIO_MLB	40B8 51C3
ADC_LDO6_RUIM_1V8	RADIO_TO_PMU_ADC_LDO6_RUIM_1V8 - @single_brd_lib.SINGLE_BRD	13C6 24C6
	ADC_LDO6_RUIM_1V8 - @single_brd_lib.RADIO_MLB	35A7 35B8
ADC_LVS1	RADIO_TO_PMU_ADC_LVS1 - @single_brd_lib.SINGLE_BRD	13C6 24C6
	ADC_LVS1 - @single_brd_lib.RADIO_MLB	35A7 35A8
ADC_SMPS1_MSMC_1V05	RADIO_TO_PMU_ADC_SMPS1_MSMC_1V05 - @single_brd_lib.SINGLE_BRD	13C6 24C6
	ADC_SMPS1_MSMC_1V05 - @single_brd_lib.RADIO_MLB	35A7 35B8
ADC_SMPS3_MSME_1V8	RADIO_TO_PMU_ADC_SMPS3_MSME_1V8 - @single_brd_lib.SINGLE_BRD	13C6 24C6
	ADC_SMPS3_MSME_1V8 - @single_brd_lib.RADIO_MLB	35A7 35B8
AP_HSIC1_RDY	AP_TO_BB_HSIC1_RDY - @single_brd_lib.SINGLE_BRD	3C2 24B6
	AP_HSIC1_RDY - @single_brd_lib.RADIO_MLB	35C1 35C8 39B2
AP_HSIC3_RDY	AP_TO_WLAN_HSIC2_RDY - @single_brd_lib.SINGLE_BRD	3C2 24B6
	AP_HSIC3_RDY - @single_brd_lib.RADIO_MLB	35C6 35C8 56B3
AP_WAKE_MODEM	AP_TO_BB_WAKE_MODEM - @single_brd_lib.SINGLE_BRD	3C8 24B6
	AP_WAKE_MODEM - @single_brd_lib.RADIO_MLB	35D8 39B4
BB_ERROR_FLAG	BB_ERROR_FLAG - @single_brd_lib.RADIO_MLB	35D6 39B2
BB_HSIC1_REMOTE_WAKE	BB_TO_AP_HSIC1_REMOTE_WAKE - @single_brd_lib.SINGLE_BRD	3C2 24B6
	BB_HSIC1_REMOTE_WAKE - @single_brd_lib.RADIO_MLB	35C8 39B2
BB_I2S_CLK	45_AP_TO_BB_I2S1_BCLK - @single_brd_lib.SINGLE_BRD	3C4 24C6
	BB_I2S_CLK - @single_brd_lib.RADIO_MLB	35B5 35C8 39B4
BB_I2S_RXD	AP_TO_BB_I2S1_DOUT - @single_brd_lib.SINGLE_BRD	3C4 24C6
	BB_I2S_RXD - @single_brd_lib.RADIO_MLB	35B5 35C8 39B4
BB_I2S_TXD	BB_TO_AP_I2S1_DIN - @single_brd_lib.SINGLE_BRD	3C4 24C6
	BB_I2S_TXD - @single_brd_lib.RADIO_MLB	35B5 35C8 39B4
BB_I2S_WS	AP_TO_BB_I2S1_LRCLK - @single_brd_lib.SINGLE_BRD	3C4 24C6
	BB_I2S_WS - @single_brd_lib.RADIO_MLB	35B5 35C8 39B4
BB_IPC_GPIO	BB_TO_AP_IPC_GPIO - @single_brd_lib.SINGLE_BRD	7C8 24A6
	BB_IPC_GPIO - @single_brd_lib.RADIO_MLB	35A8 39B2
BB_JTAG_RTCLK	BB_JTAG_RTCLK - @single_brd_lib.RADIO_MLB	35C3 38B3
BB_JTAG_TCK	AP_TO_BB_JTAG_TCK - @single_brd_lib.SINGLE_BRD	3B7 24D3
	BB_JTAG_TCK - @single_brd_lib.RADIO_MLB	35B8 35C3 38B5
BB_JTAG_TDI	AP_TO_BB_JTAG_TDI - @single_brd_lib.SINGLE_BRD	3C7 24D3
	BB_JTAG_TDI - @single_brd_lib.RADIO_MLB	35B8 35C3 38B5
BB_JTAG_TDO	BB_TO_AP_JTAG_TDO - @single_brd_lib.SINGLE_BRD	3C7 24D3
	BB_JTAG_TDO - @single_brd_lib.RADIO_MLB	35B8 35C3 38B3
BB_JTAG_TMS	AP_TO_BB_JTAG_TMS - @single_brd_lib.SINGLE_BRD	3B7 24D3
	BB_JTAG_TMS - @single_brd_lib.RADIO_MLB	35B8 35C3 38B5
BB_JTAG_TRST_L	AP_TO_BB_JTAG_TRST_L - @single_brd_lib.SINGLE_BRD	3D5 24D3
	BB_JTAG_TRST_L - @single_brd_lib.RADIO_MLB	35B8 35C3 38B5
BB_PDM	BB_PDM - @single_brd_lib.RADIO_MLB	39B2 49C7
BB_PDM_FILT	BB_PDM_FILT - @single_brd_lib.RADIO_MLB	49C6
BB_RST_L	AP_TO_BB_RST_L - @single_brd_lib.SINGLE_BRD	3C8 24D6
	BB_RST_L - @single_brd_lib.RADIO_MLB	35C1 35D8 37C8
BB_SPI_TO_PAC_CLK	BB_TO_ANTENNA_PAC_SPI_SCLK - @single_brd_lib.SINGLE_BRD	24A6
	BB_SPI_TO_PAC_CLK - @single_brd_lib.RADIO_MLB	35B8 39C4 53C7
BB_SPI_TO_PAC_CLK_FILT	BB_SPI_TO_PAC_CLK_FILT - @single_brd_lib.RADIO_MLB	53C6
BB_SPI_TO_PAC_CS	BB_TO_ANTENNA_PAC_SPI_CS - @single_brd_lib.SINGLE_BRD	24A6
	BB_SPI_TO_PAC_CS - @single_brd_lib.RADIO_MLB	35B8 39C4 53C7
BB_SPI_TO_PAC_CS_FILT	BB_SPI_TO_PAC_CS_FILT - @single_brd_lib.RADIO_MLB	53C6
BB_SPI_TO_PAC_DATA_MOSI	BB_TO_ANTENNA_PAC_SPI_MOSI - @single_brd_lib.SINGLE_BRD	24A6
	BB_SPI_TO_PAC_DATA_MOSI - @single_brd_lib.RADIO_MLB	35B8 39C4 53C7
BB_SPI_TO_PAC_DATA_MOSI_FILT	BB_SPI_TO_PAC_DATA_MOSI_FILT - @single_brd_lib.RADIO_MLB	53C6
BB_UART_CTS_L	AP_TO_BB_UART4_RTS_L - @single_brd_lib.SINGLE_BRD	3C5 24C6
	BB_UART_CTS_L - @single_brd_lib.RADIO_MLB	35C3 35C8 39C4
BB_UART_RTS_L	BB_TO_AP_UART4_CTS_L - @single_brd_lib.SINGLE_BRD	3C5 24C6
	BB_UART_RTS_L - @single_brd_lib.RADIO_MLB	35C3 35C8 39C4
BB_UART_RXD	AP_TO_BB_UART4_TXD - @single_brd_lib.SINGLE_BRD	3C5 16C4 24C6
	BB_UART_RXD - @single_brd_lib.RADIO_MLB	35C3 35C8 39C4
BB_UART_TXD	BB_TO_AP_UART4_RXD - @single_brd_lib.SINGLE_BRD	3C5 16C4 24C6
	BB_UART_TXD - @single_brd_lib.RADIO_MLB	35C3 35C8 39C4
BB_USB_VBUS	PMU_TO_BB_VBUS_DET - @single_brd_lib.SINGLE_BRD	13B4 24C6
	BB_USB_VBUS - @single_brd_lib.RADIO_MLB	35C3 35C8 38A5
BOARD_ID	BOARD_ID - @single_brd_lib.RADIO_MLB	37D4
BOOT_CONFIG_6	BOOT_CONFIG_6 - @single_brd_lib.RADIO_MLB	35C2
BT_PCM_CLK	45_AP_TO_BT_I2S3_BCLK - @single_brd_lib.SINGLE_BRD	3C4 24B6
	BT_PCM_CLK - @single_brd_lib.RADIO_MLB	35B8 56B3
BT_PCM_IN	AP_TO_BT_I2S3_DOUT - @single_brd_lib.SINGLE_BRD	3C4 24B6
	BT_PCM_IN - @single_brd_lib.RADIO_MLB	35B8 56B3
BT_PCM_OUT	BT_TO_AP_I2S3_DIN - @single_brd_lib.SINGLE_BRD	3C4 24B6
	BT_PCM_OUT - @single_brd_lib.RADIO_MLB	35B8 56B3
BT_PCM_SYNC	AP_TO_BT_I2S3_LRCLK - @single_brd_lib.SINGLE_BRD	3C4 24B6
	BT_PCM_SYNC - @single_brd_lib.RADIO_MLB	35B8 56B3
BT_REG_ON	PMU_TO_BT_REG_ON - @single_brd_lib.SINGLE_BRD	13B3 24B6
	BT_REG_ON - @single_brd_lib.RADIO_MLB	35B8 35C1 56C6
BT_UART_CTS_L	AP_TO_BT_UART1_RTS_L - @single_brd_lib.SINGLE_BRD	3C5 24B6
	BT_UART_CTS_L - @single_brd_lib.RADIO_MLB	35B8 56B3
BT_UART_RTS_L	BT_TO_AP_UART1_CTS_L - @single_brd_lib.SINGLE_BRD	3C5 24B6
	BT_UART_RTS_L - @single_brd_lib.RADIO_MLB	35B8 56C3
BT_UART_RXD	AP_TO_BT_UART1_TXD -	3C5 24B6

FOXCONN-FD-EE

	@single_brd_lib.SINGLE_BRD	
	BT_UART_RXD -	35B6 35B8 56C3
	@single_brd_lib.RADIO_MLB	
BT_UART_TXD	BT_TO_AP_UART1_RXD -	3C5 24B6
	@single_brd_lib.SINGLE_BRD	
	BT_UART_TXD -	35B6 35B8 56C3
	@single_brd_lib.RADIO_MLB	
BT_WAKE	AP_TO_BT_WAKE -	3C8 24B6
	@single_brd_lib.SINGLE_BRD	
	BT_WAKE - @single_brd_lib.RADIO_MLB	35B8 35D1 56C2
CLK32K_AP	45_PMU_TO_WLAN_CLK32K -	13B4 13C6 24D6
	@single_brd_lib.SINGLE_BRD	
	CLK32K_AP -	35C6 35C8 56C7
	@single_brd_lib.RADIO_MLB	
DCDC_ADJ	DCDC_ADJ -	49C5
	@single_brd_lib.RADIO_MLB	
DCDC_EN	DCDC_EN - @single_brd_lib.RADIO_MLB	39C2 49C6
DCDC_MODE	DCDC_MODE -	39B2 49B6
	@single_brd_lib.RADIO_MLB	
DCDC_OUT	DCDC_OUT -	49C4
	@single_brd_lib.RADIO_MLB	
DCDC_PGND	DCDC_PGND -	49B3 49B4 49C4 49C5
	@single_brd_lib.RADIO_MLB	
DEBUG_RST_L	DEBUG_RST_L -	35D3 38B5
	@single_brd_lib.RADIO_MLB	
DRX_ASM_V1	DRX_ASM_V1 -	39B4 51C3
	@single_brd_lib.RADIO_MLB	
DRX_ASM_V2	DRX_ASM_V2 -	39C2 51C3
	@single_brd_lib.RADIO_MLB	
DRX_ASM_V3	DRX_ASM_V3 -	39C2 51C3
	@single_brd_lib.RADIO_MLB	
DRX_ASM_V4	DRX_ASM_V4 -	39B2 51C3
	@single_brd_lib.RADIO_MLB	
DRX_BB_I_N	DRX_BB_I_N -	39C8 40C5
	@single_brd_lib.RADIO_MLB	
DRX_BB_I_P	DRX_BB_I_P -	39C8 40C5
	@single_brd_lib.RADIO_MLB	
DRX_BB_Q_N	DRX_BB_Q_N -	39C8 40C5
	@single_brd_lib.RADIO_MLB	
DRX_BB_Q_P	DRX_BB_Q_P -	39C8 40C5
	@single_brd_lib.RADIO_MLB	
EBI1_CAL	EBI1_CAL -	38D2
	@single_brd_lib.RADIO_MLB	
GPIO_6	GPIO_6 - @single_brd_lib.RADIO_MLB	56C5
GPIO_51	GPIO_51 - @single_brd_lib.RADIO_MLB	35C3 39C2
GPIO_DEBUG_LED	GPIO_DEBUG_LED -	35C3 39B4
	@single_brd_lib.RADIO_MLB	
GPS_BB_I_N	GPS_BB_I_N -	39C8 40B5
	@single_brd_lib.RADIO_MLB	
GPS_BB_I_P	GPS_BB_I_P -	39C8 40B5
	@single_brd_lib.RADIO_MLB	
GPS_BB_Q_N	GPS_BB_Q_N -	39C8 40B5
	@single_brd_lib.RADIO_MLB	
GPS_BB_Q_P	GPS_BB_Q_P -	39C8 40B5
	@single_brd_lib.RADIO_MLB	
HOST_WAKE_BB	BB_TO_PMU_HOST_WAKE -	13B4 24C6
	@single_brd_lib.SINGLE_BRD	
	HOST_WAKE_BB -	35C1 35D8 39B2
	@single_brd_lib.RADIO_MLB	
HOST_WAKE_BT	BT_TO_PMU_HOST_WAKE -	13B4 24B6
	@single_brd_lib.SINGLE_BRD	
	HOST_WAKE_BT -	35C8 56C3
	@single_brd_lib.RADIO_MLB	
HOST_WAKE_WLAN	WLAN_TO_PMU_HOST_WAKE -	13B4 24C6
	@single_brd_lib.SINGLE_BRD	
	HOST_WAKE_WLAN -	35C8 56B3
	@single_brd_lib.RADIO_MLB	
JTAG_SEL	JTAG_SEL -	56A6 56C6
	@single_brd_lib.RADIO_MLB	
LAT_SW1_CTL	BB_TO_LAT_SW1_CTL -	17B1 24A6
	@single_brd_lib.SINGLE_BRD	
	LAT_SW1_CTL -	35B8 35C1 39C2
	@single_brd_lib.RADIO_MLB	
LAT_SW2_CTL	BB_TO_LAT_SW2_CTL -	17B1 24A6
	@single_brd_lib.SINGLE_BRD	
	LAT_SW2_CTL -	35B8 39C2
	@single_brd_lib.RADIO_MLB	
LTE_COEX_RXD	LTE_COEX_RXD -	39B2 56A6
	@single_brd_lib.RADIO_MLB	
LTE_COEX_TXD	LTE_COEX_TXD -	35B6 39B2 56A6
	@single_brd_lib.RADIO_MLB	
OSCAR_CONTEXT_A	OSCAR_TO_RADIO_CONTEXT_A -	20C5 24A6
	@single_brd_lib.SINGLE_BRD	
	OSCAR_CONTEXT_A -	35A8 39B4 56B3
	@single_brd_lib.RADIO_MLB	
OSCAR_CONTEXT_B	OSCAR_TO_RADIO_CONTEXT_B -	20C5 24A6
	@single_brd_lib.SINGLE_BRD	
	OSCAR_CONTEXT_B -	35A8 39B2 56B3
	@single_brd_lib.RADIO_MLB	
PAC_TO_BB_SPI_DATA_M	PAC_TO_BB_SPI_DATA_MISO -	35B8 39C4 53C7
ISO	@single_brd_lib.RADIO_MLB	
PAC_TO_BB_SPI_DATA_M	PAC_TO_BB_SPI_DATA_MISO_FILT -	53C6
ISO_FILT	@single_brd_lib.RADIO_MLB	
PA_BS	PA_BS - @single_brd_lib.RADIO_MLB	39B4 44C3 45C4 47C3 48C4
PA_ID	PA_ID - @single_brd_lib.RADIO_MLB	37D3
PA_ON_B1_B4	PA_ON_B1_B4 -	39B4 44C3
	@single_brd_lib.RADIO_MLB	
PA_ON_B2_B3	PA_ON_B2_B3 -	39B4 45C4
	@single_brd_lib.RADIO_MLB	
PA_ON_B5_B8	PA_ON_B5_B8 -	39B4 47C3
	@single_brd_lib.RADIO_MLB	
PA_ON_B13_B17	PA_ON_B13_B17 -	39B4 48C4
	@single_brd_lib.RADIO_MLB	
PA_ON_B20	PA_ON_B20 -	39B4 46C3
	@single_brd_lib.RADIO_MLB	
PA_R1	PA_R1 - @single_brd_lib.RADIO_MLB	39C2 44C3 45C4 46C3 47C3
		48C4
PBL_RUN_BB_HSIC1_RDY	BB_TO_AP_HSIC1_RDY -	3C2 24B6
	@single_brd_lib.SINGLE_BRD	
	PBL_RUN_BB_HSIC1_RDY -	35C1 35D8 39B2
	@single_brd_lib.RADIO_MLB	
PMIC_RESOUT_L	PMIC_RESOUT_L -	35C1 37C6 38B5
	@single_brd_lib.RADIO_MLB	
PMIC_SSBI	PMIC_SSBI -	35D6 37C8 38A5
	@single_brd_lib.RADIO_MLB	
PM_MDM_IRQ_L	PM_MDM_IRQ_L -	37C6 39B2
	@single_brd_lib.RADIO_MLB	
PM_USR_IRQ_L	PM_USR_IRQ_L -	37C6 39A2
	@single_brd_lib.RADIO_MLB	
PP_BATT_VCC_2G_FEM	PP_BATT_VCC_2G_FEM -	50C7
	@single_brd_lib.RADIO_MLB	
PP_BATT_VCC_CONN	PP_BATT_VCC -	12C8 15B7 15D7 22C4 22D4
	@single_brd_lib.SINGLE_BRD	22D4 22D5 22D5 22D8 23B4
		24D6

	PP_BATT_VCC_CONN -	35D1 35D8 36C8 44C6 45C6
	@single_brd_lib.RADIO_MLB	46C6 47C6 48C6 49C6 50C8
PP_BATT_VCC_PA_DCDC	PP_BATT_VCC_PA_DCDC -	49C5
	@single_brd_lib.RADIO_MLB	
PP_BATT_VCC_WLAN	PP_BATT_VCC_WLAN -	56D5
	@single_brd_lib.RADIO_MLB	
PP_LDO1	PP_LDO1 - @single_brd_lib.RADIO_MLB	36B2
PP_LDO2_XO_HS_1V8	PP_LDO2_XO_HS_1V8 -	36B1 38B5
	@single_brd_lib.RADIO_MLB	
PP_LDO3_AMUX_1V8	PP_LDO3_AMUX_1V8 -	36B1 37B5 37D4 38B6
	@single_brd_lib.RADIO_MLB	
PP_LDO4_VDDA_3V3	PP_LDO4_VDDA_3V3 -	36B1 38B6
	@single_brd_lib.RADIO_MLB	
PP_LDO5_GPS_LNA_2V5	PP_LDO5_GPS_LNA_2V5 -	36B1 52C4
	@single_brd_lib.RADIO_MLB	
PP_LDO6_RUIM_1V8	PP_LDO6_RUIM_1V8 -	35A4 35A6 35A8 35D1 36B1
	@single_brd_lib.RADIO_MLB	38A6
PP_LDO7_DAC_1V8	PP_LDO7_DAC_1V8 -	36B1 38A6
	@single_brd_lib.RADIO_MLB	
PP_LDO8_VDDPX_1V2	PP_LDO8_VDDPX_1V2 -	36B1 38A6
	@single_brd_lib.RADIO_MLB	
PP_LDO9_PLL_1V05	PP_LDO9_PLL_1V05 -	36B1 38B6 38B8 38D8
	@single_brd_lib.RADIO_MLB	
PP_LDO10_ADSP_1V05	PP_LDO10_ADSP_1V05 -	36B1 38C6 38D7
	@single_brd_lib.RADIO_MLB	
PP_LDO11_MDSP_FW_1V0	PP_LDO11_MDSP_FW_1V05 -	36B1 38C6 38D6
5	@single_brd_lib.RADIO_MLB	
PP_LDO12_MDSP_SW_1V0	PP_LDO12_MDSP_SW_1V05 -	36B1 38B6 38D7
5	@single_brd_lib.RADIO_MLB	
PP_LDO13_VDDPX_2V95	PP_LDO13_VDDPX_2V95 -	36B1 38A8
	@single_brd_lib.RADIO_MLB	
PP_LDO14_2V65	PP_LDO14_2P65 -	17A7 23C2 24D6
	@single_brd_lib.SINGLE_BRD	
	PP_LDO14_2V65 -	35B8 36B1 43C8 50C8 51C6
	@single_brd_lib.RADIO_MLB	53D3
PP_LDO14_PAC_2V65	PP_LDO14_PAC_2V65 -	53D4
	@single_brd_lib.RADIO_MLB	
PP_LVS1	PP_LVS1 - @single_brd_lib.RADIO_MLB	35A8 36D1 38B6
PP_PA	PP_PA - @single_brd_lib.RADIO_MLB	44C6 45C6 46C6 47C6 48C6
		49C2 50C8
PP_RF1_1V3_DRX_FE	PP_RF1_1V3_DRX_FE -	41B4 41B5
	@single_brd_lib.RADIO_MLB	
	PP_RF1_1V3_DRX_LBL0 -	41A5 41B4
	@single_brd_lib.RADIO_MLB	
	PP_RF1_1V3_DRX_MBL0 -	41A5 41B4
	@single_brd_lib.RADIO_MLB	
	PP_RF1_1V3_GPS_DIG -	41A1 41D3
	@single_brd_lib.RADIO_MLB	
	PP_RF1_1V3_GPS_LNA -	41A1 41D3
	@single_brd_lib.RADIO_MLB	
	PP_RF1_1V3_GPS_PLL -	41A1 41D3
	@single_brd_lib.RADIO_MLB	
	PP_RF1_1V3_GPS_VCO -	41A1 41D3
	@single_brd_lib.RADIO_MLB	
	PP_RF1_1V3_JAM_DET -	41A6 41B4
	@single_brd_lib.RADIO_MLB	
	PP_RF1_1V3_PRX_FELO1 -	41B4 41B5
	@single_brd_lib.RADIO_MLB	
	PP_RF1_1V3_PRX_FELO2 -	41B4 41B6
	@single_brd_lib.RADIO_MLB	
	PP_RF1_1V3_PRX_PLL -	41A4 41D6
	@single_brd_lib.RADIO_MLB	
	PP_RF1_1V3_PRX_VCO -	41B4 41D6
	@single_brd_lib.RADIO_MLB	
	PP_RF1_1V3_SHDR_PLL -	41A4 41D6
	@single_brd_lib.RADIO_MLB	
	PP_RF1_1V3_SHDR_VCO -	41A4 41C6
	@single_brd_lib.RADIO_MLB	
	PP_RF1_1V3_TX_DA -	41B1 41C6
	@single_brd_lib.RADIO_MLB	
	PP_RF1_1V3_TX_LO -	41B1 41B6
	@single_brd_lib.RADIO_MLB	
	PP_RF1_1V3_TX_SYNTH -	41B1 41B6
	@single_brd_lib.RADIO_MLB	
	PP_RF1_1V3_TX_UPCONVERTER -	41B1 41B6
	@single_brd_lib.RADIO_MLB	
	PP_SMPS2_RF1_1V3_FILT -	41B2 41B6
	@single_brd_lib.RADIO_MLB	
	PP_RF1_1V3_TX_UPCONVERTER -	41B1 41B6
	@single_brd_lib.RADIO_MLB	
	PP_RF1_1V3_TX_SYNTH -	41B1 41C6
	@single_brd_lib.RADIO_MLB	
	PP_RF1_1V3_TX_LO -	41B1 41B6
	@single_brd_lib.RADIO_MLB	
	PP_RF1_1V3_TX_DA -	41B1 41B6
	@single_brd_lib.RADIO_MLB	
	PP_RF1_1V3_SHDR_VCO -	41A4 41C6
	@single_brd_lib.RADIO_MLB	
	PP_RF1_1V3_SHDR_PLL -	41A4 41D6
	@single_brd_lib.RADIO_MLB	
	PP_RF1_1V3_PRX_VCO -	41B4 41D6
	@single_brd_lib.RADIO_MLB	
	PP_RF1_1V3_PRX_PLL -	41A4 41D6
	@single_brd_lib.RADIO_MLB	
	PP_RF1_1V3_PRX_FELO1 -	41B4 41B5
	@single_brd_lib.RADIO_MLB	
	PP_RF1_1V3_JAM_DET -	41A6 41B4
	@single_brd_lib.RADIO_MLB	
	PP_RF1_1V3_GPS_VCO -	41A1 41D3
	@single_brd_lib.RADIO_MLB	
	PP_RF1_1V3_GPS_PLL -	41A1 41D3
	@single_brd_lib.RADIO_MLB	
	PP_RF1_1V3_GPS_LNA -	41A1 41D3
	@single_brd_lib.RADIO_MLB	
	PP_RF1_1V3_GPS_DIG -	41A1 41D3
	@single_brd_lib.RADIO_MLB	
	PP_RF1_1V3_DRX_LBL0 -	41A5 41B4
	@single_brd_lib.RADIO_MLB	
PP_RF1_1V8_DIG	PP_RF1_1V8_DIG -	41A1 41C4
	@single_brd_lib.RADIO_MLB	
	PP_SMPS3_MSME_1V8 -	35A8 35D1 36B6 36C1 38A6
	@single_brd_lib.RADIO_MLB	38A6 38A8 38C6 38D7
		38D8 39B8 39C4 41C5
PP_RF2_2V05_DRX_BB	PP_RF2_2V05_DRX_BB -	41B4 41D1
	@single_brd_lib.RADIO_MLB	
	PP_RF2_2V05_PRX_BB -	41B4 41D1
	@single_brd_lib.RADIO_MLB	
	PP_RF2_2V05_PRX_VCO -	41B4 41C1
	@single_brd_lib.RADIO_MLB	
	PP_RF2_2V05_SHDR_VCO -	41A4 41C1
	@single_brd_lib.RADIO_MLB	
	PP_RF2_2V05_TX_BB -	41B1 41D1
	@single_brd_lib.RADIO_MLB	
	PP_RF2_2V05_TX_DA -	41B1 41D1

	@single_brd_lib.RADIO_MLB	
	PP_RF2_2V05_TX_PLL -	41B1 41C1
	@single_brd_lib.RADIO_MLB	
	PP_RF2_2V05_TX_VCO -	41B1 41C1
	@single_brd_lib.RADIO_MLB	
	PP_RF2_2V05_XO_FILT -	41B1 41C1
	@single_brd_lib.RADIO_MLB	
	PP_SMPS4_RF2_2V05_FILT -	41D3
	@single_brd_lib.RADIO_MLB	
	PP_RF2_2V05_XO_FILT -	41B1 41C1
	@single_brd_lib.RADIO_MLB	
	PP_RF2_2V05_TX_VCO -	41B1 41C1
	@single_brd_lib.RADIO_MLB	
	PP_RF2_2V05_TX_PLL -	41B1 41C1
	@single_brd_lib.RADIO_MLB	
	PP_RF2_2V05_TX_DA -	41B1 41D1
	@single_brd_lib.RADIO_MLB	
	PP_RF2_2V05_TX_BB -	41B1 41D1
	@single_brd_lib.RADIO_MLB	
	PP_RF2_2V05_SHDR_VCO -	41A4 41C1
	@single_brd_lib.RADIO_MLB	
	PP_RF2_2V05_PRX_VCO -	41B4 41C1
	@single_brd_lib.RADIO_MLB	
	PP_RF2_2V05_PRX_BB -	41B4 41D1
	@single_brd_lib.RADIO_MLB	
PP_SMPS1_MSMC_1V05	PP_SMPS1_MSMC_1V05 -	35A8 36D1 38C8 38C8 38D8
	@single_brd_lib.RADIO_MLB	
PP_SMPS2_RF1_1V3	PP_SMPS2_RF1_1V3 -	36D1 38A5 41D8
	@single_brd_lib.RADIO_MLB	
PP_SMPS4_RF2_2V05	PP_SMPS4_RF2_2V05 -	36B6 36C1 41D3
	@single_brd_lib.RADIO_MLB	
PP_SMPS5_DSP_1V05	PP_SMPS5_DSP_1V05 -	38B8 38C1
	@single_brd_lib.RADIO_MLB	
PP_SPI_NOR_1V8	PP_SPI_NOR_1V8 -	36D1
	@single_brd_lib.RADIO_MLB	
PP_SYNC	BB_TO_AP_PP_SYNC -	3C5 24B6
	@single_brd_lib.SINGLE_BRD	
	PP_SYNC - @single_brd_lib.RADIO_MLB	35C8 39B2
PP_VCC_MAIN_WLAN	PP_VCC_MAIN -	10D7 12A8 12B7 12C8 13C2
	@single_brd_lib.SINGLE_BRD	14B4 14B8 14D6 21B7 23A2
		24D6
	PP_VCC_MAIN_WLAN -	35D8 56D6
	@single_brd_lib.RADIO_MLB	
PP_VREG	PP_VREG - @single_brd_lib.RADIO_MLB	36D2
PP_VSW_S1	PP_VSW_S1 -	36C4
	@single_brd_lib.RADIO_MLB	
PP_VSW_S2	PP_VSW_S2 -	36C4
	@single_brd_lib.RADIO_MLB	
PP_VSW_S3	PP_VSW_S3 -	36C4
	@single_brd_lib.RADIO_MLB	
PP_VSW_S4	PP_VSW_S4 -	36C4
	@single_brd_lib.RADIO_MLB	
PP_VSW_S5	PP_VSW_S5 -	36B4
	@single_brd_lib.RADIO_MLB	
PP_WLAN_VDDIO_1V8	PP_WLAN_VDDIO_1V8 -	56B6 56C4
	@single_brd_lib.RADIO_MLB	
PP_WL_BT_VDDIO_AP	PP_WL_BT_VDDIO_AP -	3A4 3C8 4B8 10C3 10C7
	@single_brd_lib.SINGLE_BRD	12D1 14B7 16D4 17D8 23D3
		24D6
	PP_WL_BT_VDDIO_AP -	35C8 56C3
	@single_brd_lib.RADIO_MLB	
PRX_BB_I_N	PRX_BB_I_N -	39C8 40D5
	@single_brd_lib.RADIO_MLB	
PRX_BB_I_P	PRX_BB_I_P -	39C8 40D5
	@single_brd_lib.RADIO_MLB	
PRX_BB_Q_N	PRX_BB_Q_N -	39C8 40D5
	@single_brd_lib.RADIO_MLB	
PRX_BB_Q_P	PRX_BB_Q_P -	39C8 40D5
	@single_brd_lib.RADIO_MLB	
PS_HOLD	PS_HOLD - @single_brd_lib.RADIO_MLB	37C8 39B2
PS_HOLD_PMIC	PS_HOLD_PMIC -	35C3 37C7
	@single_brd_lib.RADIO_MLB	
RADIO_ON_L	AP_TO_RADIO_ON_L -	3C8 24D6
	@single_brd_lib.SINGLE_BRD	
	RADIO_ON_L -	35D3 35D8 37C8
	@single_brd_lib.RADIO_MLB	
REF_BYP	REF_BYP - @single_brd_lib.RADIO_MLB	36C5
REF_GND	REF_GND - @single_brd_lib.RADIO_MLB	36C5
RESET_DET_L	BB_TO_AP_RESET_DET_L -	3C8 24D6
	@single_brd_lib.SINGLE_BRD	
	RESET_DET_L -	35C1 35D8 39B2
	@single_brd_lib.RADIO_MLB	
RESET_PMU_L	PMU_TO_BB_RST_L -	13B3 24D6
	@single_brd_lib.SINGLE_BRD	
	RESET_PMU_L -	35D3 35D8 37C8
	@single_brd_lib.RADIO_MLB	
RF_RESET_L	RESET_1V8_L -	2B7 4D8 13B6 14C6 16C2
	@single_brd_lib.SINGLE_BRD	19B2 22B4 24D6
	RF_RESET_L -	35C3 35D8
	@single_brd_lib.RADIO_MLB	
RREFEXT	RREFEXT - @single_brd_lib.RADIO_MLB	38A5
S1_GND	S1_GND - @single_brd_lib.RADIO_MLB	36B6 36D2 37B6
S2_GND	S2_GND - @single_brd_lib.RADIO_MLB	36B6 36C2 37B6
S3_GND	S3_GND - @single_brd_lib.RADIO_MLB	36B6 36C2 37B6
S4_GND	S4_GND - @single_brd_lib.RADIO_MLB	36B6 36C2 37B6
S5_GND	S5_GND - @single_brd_lib.RADIO_MLB	36B2 36B5 37B6
SDIO_DATA_1	SDIO_DATA_1 -	56A6 56B6
	@single_brd_lib.RADIO_MLB	
SDIO_DATA_2	SDIO_DATA_2 -	56A6 56B6
	@single_brd_lib.RADIO_MLB	
SIMCRD_CLK_CONN	SIMCRD_CLK_CONN -	35A2 35A6 35C1 35D5 39C4
	@single_brd_lib.RADIO_MLB	
SIMCRD_IO_CONN	SIMCRD_IO_CONN -	35A4 35A4 35C1 39C4
	@single_brd_lib.RADIO_MLB	
SIMCRD_RST_CONN	SIMCRD_RST_CONN -	35A4 35A6 35C1 35D5 39C4
	@single_brd_lib.RADIO_MLB	
SIM_TRAY_DETECT	SIM_TRAY_DETECT -	35A2 35A5 35C1 39C4
	@single_brd_lib.RADIO_MLB	
SLEEP_CLK_32K	SLEEP_CLK_32K -	35D6 37B2 38B5
	@single_brd_lib.RADIO_MLB	
SPI_CLK	SPI_CLK - @single_brd_lib.RADIO_MLB	35D5 39A8 39C4
SPI_CS_L	SPI_CS_L -	35C5 39A6 39C4
	@single_brd_lib.RADIO_MLB	
SPI_DATA_MISO	SPI_DATA_MISO -	35C5 39A6 39C4
	@single_brd_lib.RADIO_MLB	
SPI_DATA_MOSI	SPI_DATA_MOSI -	35D5 39A8 39C4
	@single_brd_lib.RADIO_MLB	
TX_BB_I_N	TX_BB_I_N -	39C6 40D4
	@single_brd_lib.RADIO_MLB	
TX_BB_I_P	TX_BB_I_P -	39C6 40D4
	@single_brd_lib.RADIO_MLB	
TX_BB_Q_N	TX_BB_Q_N -	39C6 40D4
	@single_brd_lib.RADIO_MLB	
TX_BB_Q_P	TX_BB_Q_P -	39C6 40D4

	@single_brd_lib.RADIO_MLB	
TX_GTR_THRESH	BB_TO_LEDDRV_GSM_BLANK -	15A6 24D6
	@single_brd_lib.SINGLE_BRD	
	TX_GTR_THRESH -	35D8 39C2
	@single_brd_lib.RADIO_MLB	
VDDPX_BIAS	VDDPX_BIAS -	37D3 38B6
	@single_brd_lib.RADIO_MLB	
VREF_DAC_BIAS	VREF_DAC_BIAS -	37C3 39C6
	@single_brd_lib.RADIO_MLB	
WLAN_BUCK_OUT	WLAN_BUCK_OUT -	56C7
	@single_brd_lib.RADIO_MLB	
WLAN_CLK32K	WLAN_CLK32K -	56C6
	@single_brd_lib.RADIO_MLB	
WLAN_COEX_RXD	WLAN_COEX_RXD -	56A5 56B6
	@single_brd_lib.RADIO_MLB	
WLAN_COEX_TXD	WLAN_COEX_TXD -	35B6 56A5 56B6
	@single_brd_lib.RADIO_MLB	
WLAN_HSIC3_DEVICE_RD	WLAN_TO_AP_HSIC2_RDY -	3C2 24B6
Y	@single_brd_lib.SINGLE_BRD	
	WLAN_HSIC3_DEVICE_RDY -	35C6 35C8 56B3
	@single_brd_lib.RADIO_MLB	
WLAN_HSIC3_RESUME	WLAN_TO_AP_HSIC2_REMOTE_WAKE -	3C2 24B6
	@single_brd_lib.SINGLE_BRD	
	WLAN_HSIC3_RESUME -	35C6 35D8 56B3
	@single_brd_lib.RADIO_MLB	
WLAN_REG_ON	PMU_TO_WLAN_REG_ON -	13B3 24C6
	@single_brd_lib.SINGLE_BRD	
	WLAN_REG_ON -	35C1 35C8 56C6
	@single_brd_lib.RADIO_MLB	
WLAN_SR_VLX1	WLAN_SR_VLX1 -	56B6
	@single_brd_lib.RADIO_MLB	
WLAN_TX_BLANK	WLAN_TX_BLANK -	39B2 56B3
	@single_brd_lib.RADIO_MLB	
WLAN_UART_RXD	AP_TO_WLAN_UART3_TXD -	3C5 24C6
	@single_brd_lib.SINGLE_BRD	
	WLAN_UART_RXD -	35C8 56B3
	@single_brd_lib.RADIO_MLB	
WLAN_UART_TXD	WLAN_TO_AP_UART3_RXD -	3C5 24C6
	@single_brd_lib.SINGLE_BRD	
	WLAN_UART_TXD -	35C8 56B3
	@single_brd_lib.RADIO_MLB	
WTR_BB_TX_DAC_IREF	WTR_BB_TX_DAC_IREF -	39C6 40D4
	@single_brd_lib.RADIO_MLB	
WTR_GP_DATA0	WTR_GP_DATA0 -	39B2 40D4
	@single_brd_lib.RADIO_MLB	
WTR_GP_DATA1	WTR_GP_DATA1 -	39B2 40D4
	@single_brd_lib.RADIO_MLB	
WTR_RBIAS	WTR_RBIAS -	40C4
	@single_brd_lib.RADIO_MLB	
WTR_RF_ON	WTR_RF_ON -	35C6 39B4 40C4
	@single_brd_lib.RADIO_MLB	
WTR_RX_ON	WTR_RX_ON -	35C6 39B4 40C4
	@single_brd_lib.RADIO_MLB	
WTR_SSBI_PRX_DRX	WTR_SSBI_PRX_DRX -	35C6 39B2 40C4
	@single_brd_lib.RADIO_MLB	
WTR_SSBI_TX_GPS	WTR_SSBI_TX_GPS -	35C6 39B2 40C4
	@single_brd_lib.RADIO_MLB	
XO_GND	XO_GND - @single_brd_lib.RADIO_MLB	37A4
XO_THERM_Y1	XO_THERM_Y1 -	37B4
	@single_brd_lib.RADIO_MLB	

foxconn

Title: Cref Part Report
Design: single_brd
Date: Feb 6 20:18:49 2013

BS1	PCB_STANDOFF	single_brd[22A5]
BS2	PCB_STANDOFF	single_brd[22A5]
C1	CAP_01005	single_brd[2B7]
C1_RF	SUPPR_TRANSIENT_2P1_01005-1	radio_mlb[35A4]single_brd[24]
C2	CAP_0201	single_brd[2C6]
C2_RF	CAP_0201-1	radio_mlb[36B4]single_brd[24]
C3	CAP_0204	single_brd[6D3]
C3_RF	CAP_0201-1	radio_mlb[36B4]single_brd[24]
C4	CAP_01005	single_brd[17C6]
C4_RF	CAP_0201-1	radio_mlb[36B4]single_brd[24]
C5	CAP_01005	single_brd[17C6]
C5_RF	CAP_0201-1	radio_mlb[36A3]single_brd[24]
C6	CAP_01005	single_brd[7C6]
C6_RF	CAP_0201-1	radio_mlb[36B3]single_brd[24]
C7	CAP_01005	single_brd[7C6]
C7_RF	CAP_0201-1	radio_mlb[36A3]single_brd[24]
C8	CAP_01005	single_brd[17C6]
C8_RF	CAP_0402	radio_mlb[36B3]single_brd[24]
C9	CAP_01005	single_brd[22D6]
C9_RF	CAP_0402	radio_mlb[36A3]single_brd[24]
C10	CAP_01005	single_brd[12A5]
C10_RF	CAP_0402	radio_mlb[36B3]single_brd[24]
C11	CAP_0201	single_brd[20C1]
C11_RF	CAP_0402	radio_mlb[36A2]single_brd[24]
C12	CAP_01005	single_brd[17A6]
C12_RF	CAP_0201-1	radio_mlb[36D2]single_brd[24]
C13	CAP_01005	single_brd[17A6]
C13_RF	CAP_0402	radio_mlb[36B2]single_brd[24]
C14	CAP_0402-1	single_brd[14A2]
C14_RF	CAP_0201-1	radio_mlb[38D8]single_brd[24]
C15_RF	CAP_0201-1	radio_mlb[38D8]single_brd[24]
C16	CAP_402	single_brd[12A3]
C16_RF	CAP_0201-1	radio_mlb[38D8]single_brd[24]
C17	CAP_01005	single_brd[19B4]
C17_RF	CAP_0201-1	radio_mlb[38D8]single_brd[24]
C18	CAP_01005	single_brd[19A4]
C18_RF	CAP_0201-1	radio_mlb[38D7]single_brd[24]
C19	CAP_01005	single_brd[19A4]
C19_RF	CAP_0201-1	radio_mlb[38D7]single_brd[24]
C20	CAP_01005	single_brd[2C5]
C20_RF	CAP_0201-1	radio_mlb[38D7]single_brd[24]
C21	CAP_01005	single_brd[2C5]
C21_RF	CAP_0201-1	radio_mlb[38D7]single_brd[24]
C22	CAP_01005	single_brd[22D6]
C22_RF	CAP_0201-1	radio_mlb[38D7]single_brd[24]
C23	CAP_01005	single_brd[22D8]
C23_RF	CAP_0201-1	radio_mlb[38D7]single_brd[24]
C24	CAP_402	single_brd[12A3]
C24_RF	CAP_0201-1	radio_mlb[38D7]single_brd[24]
C25	CAP_01005	single_brd[22D7]
C25_RF	CAP_0201-1	radio_mlb[38D7]single_brd[24]
C26	CAP_01005	single_brd[10B7]
C26_RF	CAP_0201-1	radio_mlb[38D7]single_brd[24]
C27	CAP_01005	single_brd[10A7]
C27_RF	CAP_0201-1	radio_mlb[38D6]single_brd[24]
C28	CAP_0402-1	single_brd[14B1]
C28_RF	CAP_0201-1	radio_mlb[38D6]single_brd[24]
C29	CAP_0201-1	single_brd[15C4]
C29_RF	CAP_0201-1	radio_mlb[38D6]single_brd[24]
C30	CAP_402	single_brd[5B5]
C30_RF	CAP_0201-1	radio_mlb[38D6]single_brd[24]
C31	CAP_0201-1	single_brd[16B7]
C31_RF	CAP_01005	radio_mlb[38B6]single_brd[24]
C32_RF	CAP_0201-1	radio_mlb[38D6]single_brd[24]
C33	CAP_01005	single_brd[2C6]
C33_RF	CAP_0201-1	radio_mlb[38A6]single_brd[24]
C34_RF	CAP_0201-1	radio_mlb[38D6]single_brd[24]
C35	CAP_01005	single_brd[2C4]
C35_RF	CAP_0201-1	radio_mlb[38D5]single_brd[24]
C36	CAP_01005	single_brd[2C2]
C36_RF	CAP_0201-1	radio_mlb[38D5]single_brd[24]
C37	CAP_01005	single_brd[2C2]
C37_RF	CAP_01005	radio_mlb[56C4]single_brd[24]
C38	CAP_0201-1	single_brd[16D5]
C38_RF	CAP_01005	radio_mlb[53C5]single_brd[24]
C39	CAP_01005	single_brd[16D4]
C39_RF	CAP_0201	radio_mlb[46B3]single_brd[24]
C40	CAP_0204	single_brd[4B7]
C40	CAP_0201	radio_mlb[42C3]single_brd[24]
C41	CAP_01005	single_brd[4D8]
C41_RF	CAP_402	radio_mlb[49B3]single_brd[24]
C42_RF	CAP_0402	radio_mlb[36C8]single_brd[24]
C43	CAP_0204	single_brd[4B8]
C43_RF	CAP_0402	radio_mlb[36C7]single_brd[24]
C44	CAP_01005	single_brd[11A4]
C44_RF	CAP_0402	radio_mlb[36C7]single_brd[24]
C45	CAP_01005	single_brd[8C3]
C45_RF	CAP_01005	radio_mlb[36C7]single_brd[24]
C46_RF	CAP_0402	radio_mlb[36B6]single_brd[24]
C47	CAP_402	single_brd[14D5]
C47_RF	CAP_0402	radio_mlb[36B6]single_brd[24]
C48	CAP_0204	single_brd[4A8]
C48_RF	CAP_0402	radio_mlb[36B6]single_brd[24]
C49	CAP_0204	single_brd[4C7]
C49_RF	CAP_0402	radio_mlb[36B6]single_brd[24]
C50	CAP_0201	single_brd[6C4]
C50_RF	CAP_01005	radio_mlb[36C5]single_brd[24]
C51	CAP_01005	single_brd[9B2]
C51_RF	CAP_0402	radio_mlb[36B5]single_brd[24]
C52	CAP_0402-1	single_brd[14C4]
C52_RF	CAP_0201-1	radio_mlb[36A4]single_brd[24]
C53	CAP_0204	single_brd[4C8]
C53_RF	CAP_0201-1	radio_mlb[36A4]single_brd[24]
C54	CAP_0402-1	single_brd[14D4]
C54_RF	CAP_0201-1	radio_mlb[36A4]single_brd[24]
C55	CAP_01005	single_brd[9B7]
C55_RF	CAP_0603	radio_mlb[36D2]single_brd[24]
C56	CAP_01005	single_brd[11B7]
C56_RF	CAP_0603	radio_mlb[36C2]single_brd[24]
C57	CAP_0610	single_brd[4B8]
C57_RF	CAP_0603-3	radio_mlb[36C2]single_brd[24]
C58	CAP_0402	single_brd[12C3]
C58_RF	CAP_0603-3	radio_mlb[36C2]single_brd[24]
C59	CAP_0204	single_brd[4C7]
C59_RF	CAP_0603	radio_mlb[36B2]single_brd[24]
C60	CAP_0204	single_brd[4A7]
C60_RF	CAP_01005	radio_mlb[36C2]single_brd[24]
C61	CAP_01005	single_brd[9B7]

C61_RF	CAP_01005	radio_mlb[39B7]single_brd[24]
C62	CAP_01005	single_brd[11C6]
C62_RF	CAP_01005	radio_mlb[39C6]single_brd[24]
C63	CAP_01005	single_brd[11C6]
C63_RF	CAP_SM	radio_mlb[48C3]single_brd[24]
C64	CAP_01005	single_brd[9B6]
C64_RF	CAP_01005	radio_mlb[50B7]single_brd[24]
C65	CAP_01005	single_brd[9B6]
C65_RF	CAP_01005	radio_mlb[50C7]single_brd[24]
C66	CAP_0402	single_brd[12C1]
C66_RF	CAP_0402	radio_mlb[50C7]single_brd[24]
C67	CAP_01005	single_brd[11C3]
C67_RF	CAP_01005	radio_mlb[50C6]single_brd[24]
C68	CAP_0610	single_brd[4C3]
C68_RF	CAP_0201-1	radio_mlb[38C8]single_brd[24]
C69	CAP_0402-1	single_brd[14C4]
C69_RF	CAP_0201-1	radio_mlb[38A6]single_brd[24]
C70	CAP_01005	single_brd[17B4]
C70_RF	CAP_0201-1	radio_mlb[38A6]single_brd[24]
C71	CAP_01005	single_brd[17B4]
C71_RF	CAP_0201-1	radio_mlb[38B6]single_brd[24]
C72	CAP_4P1_0402	single_brd[4C3]
C72_RF	CAP_0402	radio_mlb[41D7]single_brd[24]
C73	CAP_01005	single_brd[15A4]
C73_RF	CAP_01005	radio_mlb[41D6]single_brd[24]
C74	CAP_4P1_0402	single_brd[20D5]
C74_RF	CAP_01005	radio_mlb[41D6]single_brd[24]
C75	CAP_0402-2	single_brd[4D3]
C75_RF	CAP_01005	radio_mlb[41C6]single_brd[24]
C76_RF	CAP_01005	radio_mlb[41C6]single_brd[24]
C77_RF	CAP_01005	radio_mlb[41C6]single_brd[24]
C78	CAP_0204	single_brd[5B5]
C78_RF	CAP_01005	radio_mlb[41C6]single_brd[24]
C79	CAP_01005	single_brd[18C8]
C79_RF	CAP_01005	radio_mlb[41B6]single_brd[24]
C80	CAP_0402-2	single_brd[4D3]
C80_RF	CAP_01005	radio_mlb[41B6]single_brd[24]
C81	CAP_0204	single_brd[5C3]
C81_RF	CAP_01005	radio_mlb[41B6]single_brd[24]
C82	CAP_01005	single_brd[21A6]
C82_RF	CAP_01005	radio_mlb[41A6]single_brd[24]
C83	CAP_4P1_0402	single_brd[4C3]
C83_RF	CAP_01005	radio_mlb[41A6]single_brd[24]
C84	CAP_01005	single_brd[21A5]
C85	CAP_01005	single_brd[5A2]
C85_RF	CAP_01005	radio_mlb[41D5]single_brd[24]
C86	CAP_0204	single_brd[5B5]
C86_RF	CAP_01005	radio_mlb[41D5]single_brd[24]
C87	CAP_4P1_0402	single_brd[4C3]
C87_RF	CAP_0201-1	radio_mlb[41C5]single_brd[24]
C88	CAP_01005	single_brd[19C3]
C88_RF	CAP_0402	radio_mlb[41D3]single_brd[24]
C89	CAP_4P1_0402	single_brd[4C3]
C89_RF	CAP_01005	radio_mlb[41C1]single_brd[24]
C90	CAP_01005	single_brd[19C3]
C90_RF	CAP_01005	radio_mlb[41C1]single_brd[24]
C91	CAP_0204	single_brd[5B3]
C91_RF	CAP_01005	radio_mlb[41C1]single_brd[24]
C92	CAP_4P1_0402	single_brd[20D6]
C92_RF	CAP_01005	radio_mlb[41B1]single_brd[24]
C93	CAP_01005	single_brd[19C3]
C93	CAP_0201	radio_mlb[42B3]single_brd[24]
C94	CAP_01005	single_brd[19D3]
C95	CAP_0204	single_brd[5B5]
C96	CAP_01005	single_brd[12B7]
C96_RF	CAP_01005	radio_mlb[53C6]single_brd[24]
C97	CAP_4P1_0402	single_brd[4B3]
C97_RF	CAP_01005	radio_mlb[53C5]single_brd[24]
C98	CAP_01005	single_brd[17D2]
C98_RF	CAP_01005	radio_mlb[53C5]single_brd[24]
C99	CAP_01005	single_brd[17A5]
C99_RF	CAP_01005	radio_mlb[53D4]single_brd[24]
C100	CAP_4P1_0402	single_brd[4B3]
C101	CAP_01005	single_brd[17D3]
C101_RF	CAP_201	radio_mlb[56D2]single_brd[24]
C102	CAP_01005	single_brd[17A5]
C102_RF	CAP_402	radio_mlb[56B7]single_brd[24]
C103	CAP_01005	single_brd[17D3]
C103_RF	CAP_0402-2	radio_mlb[56C5]single_brd[24]
C104	CAP_0201-1	single_brd[12A4]
C104_RF	CAP_01005	radio_mlb[56C5]single_brd[24]
C105	CAP_01005	single_brd[17D3]
C105_RF	CAP_01005	radio_mlb[56C4]single_brd[24]
C106	CAP_01005	single_brd[4A8]
C106_RF	CAP_0201	radio_mlb[56C2]single_brd[24]
C107	CAP_0610	single_brd[4D3]
C107_RF	RES_201	radio_mlb[56C2]single_brd[24]
C108	CAP_01005	single_brd[4A8]
C108_RF	CAP_01005-1	radio_mlb[48C6]single_brd[24]
C109	CAP_0201-1	single_brd[12A4]
C109_RF	CAP_01005	radio_mlb[48B6]single_brd[24]
C110	CAP_01005	single_brd[17D6]
C110_RF	CAP_01005	radio_mlb[48C6]single_brd[24]
C111	CAP_01005	single_brd[4A7]
C111_RF	CAP_0201-1	radio_mlb[48C5]single_brd[24]
C112	CAP_4P1_0402	single_brd[4B3]
C112_RF	CAP_0201	radio_mlb[50B4]single_brd[24]
C113	CAP_01005	single_brd[4A7]
C113_RF	CAP_0201	radio_mlb[48B3]single_brd[24]
C114	CAP_01005	single_brd[4A5]
C114_RF	CAP_0201	radio_mlb[48B3]single_brd[24]
C115	CAP_0204	single_brd[5C2]
C115_RF	CAP_01005	radio_mlb[48B2]single_brd[24]
C116	CAP_01005	single_brd[17D6]
C116_RF	CAP_01005	radio_mlb[47C7]single_brd[24]
C117	CAP_01005	single_brd[4A5]
C117_RF	CAP_01005	radio_mlb[47B7]single_brd[24]
C118	CAP_01005	single_brd[4A4]
C118_RF	CAP_01005	radio_mlb[47C6]single_brd[24]
C119	CAP_01005	single_brd[17D3]
C119_RF	CAP_0201-1	radio_mlb[47C5]single_brd[24]
C120	CAP_01005	single_brd[4A4]
C120_RF	CAP_01005-1	radio_mlb[50C8]single_brd[24]
C121	CAP_4P1_0402	single_brd[4B3]
C121_RF	CAP_01005	radio_mlb[48C2]single_brd[24]
C122	CAP_4P1_0402	single_brd[4B3]
C122_RF	CAP_201	radio_mlb[47B2]single_brd[24]
C123	CAP_0402	single_brd[12C4]
C123_RF	CAP_0201	radio_mlb[47B2]single_brd[24]
C124	CAP_4P1_0402	single_brd[4B3]
C124_RF	CAP_0201	radio_mlb[50B3]single_brd[24]
C126	CAP_01005	single_brd[17D3]
C127	CAP_0402	single_brd[12C4]
C127_RF	CAP_01005	radio_mlb[37B4]single_brd[24]

C128	CAP_0402	single_brd[12D4]
C128_RF	CAP_01005	radio_mlb[40C4]single_brd[24]
C130	CAP_01005	single_brd[18C7]
C131	CAP_0603	single_brd[14B5]
C133	CAP_0610	single_brd[4C3]
C134	CAP_0204	single_brd[5B2]
C135	CAP_0402	single_brd[12D3]
C136	CAP_01005	single_brd[6C6]
C137	CAP_201	single_brd[18B4]
C138	CAP_01005	single_brd[9B2]
C140	CAP_0402	single_brd[12C2]
C141	CAP_0610	single_brd[4D5]
C142	CAP_01005	single_brd[4D1]
C143	CAP_01005	single_brd[9B2]
C144	CAP_01005	single_brd[6C6]
C144_RF	CAP_01005	radio_mlb[49C6]single_brd[24]
C145	CAP_0402	single_brd[12D3]
C145_RF	CAP_01005	radio_mlb[49C6]single_brd[24]
C147	CAP_01005	single_brd[18B4]
C147_RF	CAP_01005	radio_mlb[45B7]single_brd[24]
C148_RF	CAP_01005	radio_mlb[45C6]single_brd[24]
C149	CAP_0402-1	single_brd[18D4]
C149_RF	CAP_0201-1	radio_mlb[45C5]single_brd[24]
C150	CAP_01005	single_brd[18B4]
C151	CAP_0402-2	single_brd[4D3]
C152	CAP_0610	single_brd[4D3]
C152_RF	CAP_0201	radio_mlb[45B2]single_brd[24]
C153	CAP_0204	single_brd[4D2]
C153_RF	CAP_201	radio_mlb[45B2]single_brd[24]
C156	CAP_0402-1	single_brd[18D3]
C156_RF	CAP_01005	radio_mlb[46C6]single_brd[24]
C158	CAP_4P1_0402	single_brd[4D2]
C159	CAP_01005	single_brd[13C8]
C160	CAP_0610	single_brd[4D5]
C160_RF	CAP_0201	radio_mlb[46B2]single_brd[24]
C161	CAP_4P1_0402	single_brd[4D1]
C162	CAP_0402	single_brd[12D3]
C162_RF	CAP_01005	radio_mlb[44C7]single_brd[24]
C163	CAP_201	single_brd[18D2]
C163_RF	CAP_01005	radio_mlb[44B7]single_brd[24]
C164_RF	CAP_01005	radio_mlb[44C6]single_brd[24]
C165	CAP_01005	single_brd[18D2]
C165_RF	CAP_0201-1	radio_mlb[44C5]single_brd[24]
C166	CAP_4P1_0402	single_brd[4C5]
C167	CAP_01005	single_brd[13B8]
C167_RF	CAP_0201	radio_mlb[44B2]single_brd[24]
C168	CAP_01005	single_brd[13A8]
C168_RF	CAP_01005	radio_mlb[49B3]single_brd[24]
C169	CAP_4P1_0402	single_brd[4C5]
C169_RF	CAP_01005	radio_mlb[49C4]single_brd[24]
C170	CAP_0201	single_brd[18D2]
C170_RF	CAP_0201	radio_mlb[56B2]single_brd[24]
C173	CAP_0204	single_brd[4D2]
C174	CAP_4P1_0402	single_brd[4C5]
C175	CAP_0402	single_brd[12C4]
C176	CAP_01005	single_brd[17B7]
C177	CAP_0610	single_brd[4D5]
C177_RF	CAP_01005	radio_mlb[35A5]single_brd[24]
C180	CAP_0204	single_brd[6D4]
C181	CAP_0402	single_brd[12D3]
C182	CAP_0402-1	single_brd[6D3]
C182_RF	CAP_01005	radio_mlb[40C4]single_brd[24]
C183	CAP_01005	radio_mlb[42B7]single_brd[24]
C184	CAP_01005	single_brd[17D6]
C184	CAP_01005	radio_mlb[42A7]single_brd[24]
C185	CAP_0204	single_brd[6D3]
C185	CAP_01005	radio_mlb[42B7]single_brd[24]
C186	CAP_01005	radio_mlb[42B7]single_brd[24]
C187	CAP_0402-1	single_brd[6D2]
C187	CAP_01005	radio_mlb[42B7]single_brd[24]
C188	CAP_01005	single_brd[17B3]
C188	CAP_01005	radio_mlb[42A7]single_brd[24]
C189	CAP_0402	single_brd[12C3]
C189_RF	CAP_01005	radio_mlb[49C5]single_brd[24]
C190	CAP_0204	single_brd[7D7]
C190_RF	CAP_01005	radio_mlb[50C7]single_brd[24]
C191	CAP_01005	single_brd[7C5]
C192	CAP_01005	single_brd[11D6]
C193_RF	CAP_01005	radio_mlb[45C6]single_brd[24]
C194	CAP_0201-1	single_brd[11C6]
C195_RF	CAP_01005	radio_mlb[46C6]single_brd[24]
C196	CAP_01005	single_brd[11C6]
C197	CAP_01005	single_brd[8B6]
C198	CAP_01005	single_brd[11D6]
C199	CAP_01005	single_brd[11B6]
C200	CAP_01005	single_brd[11A4]
C200_RF	CAP_01005-1	radio_mlb[50C7]single_brd[24]
C201	CAP_01005	single_brd[11C7]
C201_RF	CAP_01005	radio_mlb[50B7]single_brd[24]
C202	CAP_01005	single_brd[11D6]
C202_RF	CAP_01005	radio_mlb[50C8]single_brd[24]
C203_RF	CAP_01005	radio_mlb[50C6]single_brd[24]
C204	CAP_0402-2	single_brd[12D7]
C206	CAP_01005	single_brd[17B2]
C207	CAP_0201-1	single_brd[12A4]
C207_RF	CAP_201	radio_mlb[50B3]single_brd[24]
C208	CAP_01005	single_brd[8B4]
C208_RF	CAP_01005	radio_mlb[44C6]single_brd[24]
C209	CAP_0402-1	single_brd[6D2]
C209_RF	CAP_201	radio_mlb[44C5]single_brd[24]
C210	CAP_01005	single_brd[11B6]
C210_RF	CAP_01005	radio_mlb[45C6]single_brd[24]
C211	CAP_01005	single_brd[11B7]
C211_RF	CAP_201	radio_mlb[45C5]single_brd[24]
C212	CAP_01005	single_brd[11B6]
C212_RF	CAP_01005	radio_mlb[47C5]single_brd[24]
C213	CAP_01005	single_brd[14B5]
C213_RF	CAP_201	radio_mlb[47C5]single_brd[24]
C214	CAP_01005	single_brd[14A5]
C214_RF	CAP_01005	radio_mlb[47C4]single_brd[24]
C215	CAP_0201-1	single_brd[17B7]
C215_RF	CAP_01005	radio_mlb[47C4]single_brd[24]
C216	CAP_0201-1	single_brd[8C3]
C216_RF	CAP_01005	radio_mlb[47C4]single_brd[24]
C217_RF	CAP_01005	radio_mlb[48C5]single_brd[24]
C218	CAP_402	single_brd[10B7]
C219	CAP_402	single_brd[10A7]
C220	CAP_01005	single_brd[9C7]
C221	CAP_01005	single_brd[9C7]
C222	CAP_01005	single_brd[9C7]
C223	CAP_01005	single_brd[9C7]
C224	CAP_01005	single_brd[9B7]
C225	CAP_01005	single_brd[9B7]
C226	CAP_01005	single_brd[9C6]

C226_RF	CAP_01005	radio_mlb[50C5]single_brd[24]
C227	CAP_01005	single_brd[9C6]
C227_RF	CAP_01005	radio_mlb[50C4]single_brd[24]
C228	CAP_01005	single_brd[9B6]
C228_RF	CAP_01005	radio_mlb[50C4]single_brd[24]
C229	CAP_01005	single_brd[9C6]
C229_RF	CAP_01005	radio_mlb[50C4]single_brd[24]
C230	CAP_01005	single_brd[9C6]
C230_RF	CAP_01005	radio_mlb[50C4]single_brd[24]
C231	CAP_01005	single_brd[9B6]
C231_RF	CAP_01005	radio_mlb[50C3]single_brd[24]
C232	CAP_402	single_brd[10C5]
C232_RF	CAP_01005	radio_mlb[50C3]single_brd[24]
C233	CAP_402	single_brd[10C5]
C233_RF	CAP_01005	radio_mlb[46C5]single_brd[24]
C234	CAP_402	single_brd[10B5]
C234_RF	CAP_0201	radio_mlb[46C5]single_brd[24]
C235	CAP_01005	single_brd[9C3]
C235_RF	CAP_201	radio_mlb[48C5]single_brd[24]
C236	CAP_01005	single_brd[9C3]
C236_RF	CAP_01005	radio_mlb[44C4]single_brd[24]
C237	CAP_0201-1	single_brd[10B8]
C237_RF	CAP_01005	radio_mlb[44C4]single_brd[24]
C238	CAP_402	single_brd[10B8]
C238_RF	CAP_01005	radio_mlb[44C4]single_brd[24]
C239_RF	CAP_01005	radio_mlb[46C4]single_brd[24]
C240	CAP_01005	single_brd[17B4]
C240_RF	CAP_01005	radio_mlb[46C4]single_brd[24]
C241	CAP_01005	single_brd[8B4]
C242	CAP_01005	single_brd[17D6]
C242_RF	CAP_01005	radio_mlb[50C6]single_brd[24]
C243	CAP_01005	single_brd[19B4]
C243_RF	CAP_01005	radio_mlb[50C6]single_brd[24]
C244	CAP_01005	single_brd[8C3]
C244_RF	CAP_01005	radio_mlb[41D1]single_brd[24]
C245_RF	CAP_0201	radio_mlb[43B4]single_brd[24]
C246_RF	CAP_0201	radio_mlb[43B4]single_brd[24]
C247_RF	CAP_01005	radio_mlb[53D4]single_brd[24]
C248_RF	CAP_01005	radio_mlb[40C2]single_brd[24]
C249	CAP_0201	single_brd[21B6]
C249_RF	CAP_0201	radio_mlb[44B3]single_brd[24]
C250	CAP_0402-1	single_brd[12A7]
C250_RF	CAP_201	radio_mlb[45B3]single_brd[24]
C251	CAP_0402-1	single_brd[12A7]
C251_RF	CAP_201	radio_mlb[45B3]single_brd[24]
C252	CAP_0402-1	single_brd[14B8]
C252_RF	CAP_0201	radio_mlb[47B3]single_brd[24]
C253	CAP_01005	single_brd[11B3]
C253_RF	CAP_0201	radio_mlb[47B3]single_brd[24]
C254	CAP_01005	single_brd[16D5]
C254_RF	CAP_01005-1	radio_mlb[48B3]single_brd[24]
C255_RF	CAP_201	radio_mlb[51C7]single_brd[24]
C256	CAP_402	single_brd[11A3]
C256_RF	CAP_01005	radio_mlb[47C6]single_brd[24]
C257_RF	CAP_01005	radio_mlb[47B6]single_brd[24]
C258	CAP_01005	single_brd[19B3]
C258_RF	CAP_01005	radio_mlb[44C6]single_brd[24]
C259	CAP_01005	single_brd[7C5]
C259_RF	CAP_01005	radio_mlb[45B6]single_brd[24]
C260	CAP_0402-1	single_brd[12B8]
C261	CAP_0402-1	single_brd[12B8]
C262	CAP_0402	single_brd[12D3]
C263	CAP_0402-1	single_brd[12B8]
C264	CAP_0402-1	single_brd[12B8]
C265	CAP_01005	single_brd[13B6]
C266	CAP_0201-1	single_brd[12C8]
C267	CAP_0402-1	single_brd[12B8]
C268	CAP_0402-1	single_brd[12B8]
C270	CAP_0402-1	single_brd[12B7]
C271	CAP_0402-1	single_brd[12B7]
C272	CAP_402	single_brd[12C7]
C274	CAP_01005	single_brd[7C4]
C275	CAP_01005	single_brd[22D6]
C276	CAP_01005	single_brd[12A7]
C278	CAP_402	single_brd[12B7]
C279	CAP_01005	single_brd[22D6]
C280	CAP_01005	single_brd[7B5]
C280_RF	IND_0201	radio_mlb[56C2]single_brd[24]
C281	CAP_0402-2	single_brd[12D7]
C281_RF	IND_0201	radio_mlb[56B2]single_brd[24]
C282	CAP_4P1_0402	single_brd[4C5]
C282	CAP_0201	radio_mlb[52B6]single_brd[24]
C283	CAP_01005	single_brd[12A7]
C283_RF	CAP_0201	radio_mlb[56C2]single_brd[24]
C284	CAP_01005	single_brd[7B4]
C285	CAP_0610	single_brd[4C8]
C286	CAP_01005	single_brd[21B5]
C287	CAP_01005	single_brd[21B5]
C289	CAP_0201-1	single_brd[8C6]
C290	CAP_0402	single_brd[12D4]
C291	CAP_01005	single_brd[12A2]
C292	CAP_0402	single_brd[12D4]
C293	CAP_0402	single_brd[12D2]
C294	CAP_0402	single_brd[12D3]
C295	CAP_01005	single_brd[19B3]
C296	CAP_0402	single_brd[12D4]
C297	CAP_0402-1	single_brd[14B8]
C298	CAP_0201-1	single_brd[20A7]
C299	CAP_402	single_brd[12A4]
C300	CAP_01005	single_brd[20A6]
C301	CAP_0402	single_brd[12C4]
C302	CAP_0610	single_brd[4B7]
C303	CAP_0402	single_brd[12C4]
C304	CAP_0402	single_brd[16D2]
C305	CAP_0610	single_brd[5C2]
C306	CAP_0201	single_brd[18D5]
C307	CAP_0402-1	single_brd[6D2]
C308	CAP_0402	single_brd[12D2]
C310	CAP_0402	single_brd[12C3]
C311	CAP_01005	single_brd[8B6]
C313	CAP_01005	single_brd[8B6]
C314	CAP_01005	single_brd[8B6]
C315	CAP_0402	single_brd[18D4]
C316	CAP_0402	single_brd[12D1]
C317	CAP_201	single_brd[13C4]
C318	CAP_0201-1	single_brd[13C4]
C319	CAP_201	single_brd[13C4]
C320	CAP_P_0603-LLP	single_brd[18A4]
C321	CAP_P_0402	single_brd[18B4]
C322	CAP_01005	single_brd[13B8]
C323	CAP_01005	single_brd[13C3]
C324	CAP_0402	single_brd[18D4]
C325	CAP_0402-1	single_brd[12A6]
C326	CAP_01005	single_brd[13C3]

FOXCONN D-EE

C327	CAP_0402	single_brd[12C1]
C328	CAP_0201	single_brd[18B3]
C329	CAP_0603-1	single_brd[14C3]
C330	CAP_0402-1	single_brd[14C3]
C331	CAP_0402	single_brd[18D4]
C332	CAP_0402-1	single_brd[15C6]
C333	CAP_0402-1	single_brd[15C7]
C334	CAP_0201-1	single_brd[20C3]
C335	CAP_0402-1	single_brd[15D6]
C336	CAP_01005	single_brd[20C2]
C337	CAP_0201-1	single_brd[15D6]
C338	CAP_0201-1	single_brd[16C3]
C339	CAP_201	single_brd[15D5]
C340	CAP_402	single_brd[15C4]
C341	CAP_0201-1	single_brd[15C4]
C342	CAP_0201	single_brd[15D6]
C343	CAP_0201-1	single_brd[12B7]
C344	CAP_01005	single_brd[20D2]
C345	CAP_01005	single_brd[20D3]
C346	CAP_0201	single_brd[18A3]
C347	CAP_0201-1	single_brd[20D2]
C348	CAP_0603-1	single_brd[15D7]
C349	CAP_0201	single_brd[18B3]
C350	CAP_402	single_brd[19D2]
C351	CAP_402	single_brd[19D2]
C354	CAP_01005	single_brd[9A6]
C355	CAP_01005	single_brd[17B6]
C356	CAP_01005	single_brd[9A6]
C357	CAP_0402-1	single_brd[12C8]
C358	CAP_0402-1	single_brd[12C8]
C359	CAP_01005	single_brd[17B6]
C360	CAP_01005	single_brd[15B3]
C362	CAP_01005	single_brd[9A6]
C363	CAP_01005	single_brd[15B3]
C364	CAP_0201	single_brd[18A3]
C365	CAP_0201	single_brd[18D2]
C368	CAP_0201	single_brd[17A6]
C369	CAP_0402-1	single_brd[18C7]
C370	CAP_402	single_brd[18C7]
C371	CAP_402	single_brd[18C7]
C372	CAP_0201-1	single_brd[18C6]
C374	SUPPR_TRANSIENT_2P1_01005	single_brd[17C3]
C375	SUPPR_TRANSIENT_2P1_01005	single_brd[17C3]
C376	CAP_0201	single_brd[6D3]
C377	CAP_0402	single_brd[6D3]
C378	CAP_0402	single_brd[6D3]
C379	CAP_0201-1	single_brd[5A5]
C380	CAP_0201-1	single_brd[11C3]
C381	CAP_0201	single_brd[18D5]
C385	CAP_0402-1	single_brd[15D6]
C386	CAP_0402-1	single_brd[15B6]
C387	CAP_0402-1	single_brd[15B6]
C389	CAP_0201-1	single_brd[21C6]
C390	CAP_0201-1	single_brd[21C6]
C391	CAP_0201-1	single_brd[21D6]
C392	CAP_01005	single_brd[21C5]
C393	CAP_01005	single_brd[21D5]
C394	CAP_0402-2	single_brd[15B4]
C395	CAP_01005	single_brd[21C5]
C396	CAP_0402-2	single_brd[15B4]
C397	CAP_01005	single_brd[8D3]
C398	CAP_0402-1	single_brd[12B8]
C399	CAP_0402-1	single_brd[12A8]
C400	CAP_01005	single_brd[21A5]
C402	CAP_01005	single_brd[11C3]
C403	CAP_0201	single_brd[21B5]
C404	CAP_01005	single_brd[21B5]
C405	CAP_0402-1	single_brd[12A8]
C406	CAP_01005	single_brd[8D6]
C407	CAP_01005	single_brd[11C3]
C408	CAP_01005	single_brd[15A4]
C409	CAP_01005	single_brd[8D6]
C410	CAP_01005	single_brd[11C3]
C411	CAP_0402-1	single_brd[12B7]
C412	CAP_0201-1	single_brd[10C7]
C413	CAP_01005	single_brd[10C7]
C414	CAP_0402-2	single_brd[10C7]
C416	CAP_01005	single_brd[10C6]
C417	CAP_0402-1	single_brd[12A7]
C418	CAP_0402-1	single_brd[12A7]
C419	CAP_0201-1	single_brd[12A2]
C420	CAP_201	single_brd[10D6]
C421	CAP_201	single_brd[10D6]
C422	CAP_0402-2	single_brd[10D7]
C423	CAP_0201-1	single_brd[21D6]
C424	CAP_0402-2	single_brd[10B5]
C425	CAP_402	single_brd[10C4]
C427	CAP_01005	single_brd[22A8]
C429	CAP_402	single_brd[10B4]
C430	CAP_01005	single_brd[22A8]
C432	CAP_01005	single_brd[22A7]
C433	CAP_01005	single_brd[22A6]
C434	CAP_01005	single_brd[22A6]
C435	CAP_01005	single_brd[22A6]
C436	CAP_01005	single_brd[22A6]
C437	CAP_01005	single_brd[22A6]
C438	CAP_01005	single_brd[22A6]
C439	CAP_201	single_brd[19D3]
C440	CAP_01005	single_brd[19D4]
C441	CAP_0201-1	single_brd[14C4]
C442	CAP_0201-1	single_brd[12A3]
C443	CAP_0402	single_brd[12D2]
C444	CAP_01005	single_brd[19D3]
C500	CAP_01005	single_brd[15B2]
C501	CAP_01005	single_brd[15B2]
C999	CAP_0402-1	single_brd[6D2]
C1201_RF	CAP_0402	radio_mlb[49C5]single_brd[24]
C1214_RF	CAP_01005	radio_mlb[49C5]single_brd[24]
C1215_RF	CAP_0201-1	radio_mlb[49C4]single_brd[24]
C1600	CAP_402	single_brd[16B4]
C1726_RF	CAP_01005	radio_mlb[53D6]single_brd[24]
C1799	CAP_01005	single_brd[17D7]
C2260	CAP_01005	single_brd[9C7]
C2290	CAP_01005	single_brd[9C7]
C2307	CAP_01005	single_brd[17B2]
C2511	CAP_402	single_brd[21B7]
C2800	CAP_201	single_brd[14B1]
C3096	CAP_01005	single_brd[12D7]
C3301	CAP_0402-1	single_brd[18D4]
C3337	CAP_0201-1	single_brd[15D6]
C3345	CAP_01005	single_brd[20C1]
C5000	CAP_01005	single_brd[4B8]

D1	DIODE_SCHOT_2P_SOD-923-HF	single_brd[14B6]
D3	DIODE_SCHOT_DFN1006-2	single_brd[8C6]
DZ1	SUPPR_TRANSIENT_2P1_01005-1	single_brd[8B6]
DZ2	SUPPR_TRANSIENT_2P1_01005-1	single_brd[8B6]
DZ3	SUPPR_TRANSIENT_2P1_01005-1	single_brd[8B6]
DZ4	ZENER_GDZ-0201	single_brd[18D3]
DZ7	SUPPR_TRANSIENT_2P1_01005-1	single_brd[8B6]
DZ9	SUPPR_TRANSIENT_2P1_01005	single_brd[17B6]
DZ10	SUPPR_TRANSIENT_2P1_01005	single_brd[17B6]
DZ11	SUPPR_TRANSIENT_2P1_01005	single_brd[17C6]
DZ12	SUPPR_TRANSIENT_2P1_01005	single_brd[17C6]
DZ13	SUPPR_TRANSIENT_2P1_01005-1	single_brd[17B5]
DZ14	SUPPR_TRANSIENT_2P1_01005-1	single_brd[17B5]
DZ15	SUPPR_TRANSIENT_2P1_01005-1	single_brd[17B6]
DZ16	SUPPR_TRANSIENT_2P1_01005-1	single_brd[11B5]
DZ17	SUPPR_TRANSIENT_2P1_01005-1	single_brd[11B5]
DZ18	SUPPR_TRANSIENT_2P1_01005-1	single_brd[11B5]
DZ19	SUPPR_TRANSIENT_2P1_01005-1	single_brd[11B5]
DZ101	SUPPR_TRANSIENT_2P1_01005-1	single_brd[8C5]
DZ1100	SUPPR_TRANSIENT_2P1_01005	single_brd[11C3]
DZ1101	SUPPR_TRANSIENT_2P1_01005	single_brd[11B3]
FD1	FIDUCIAL_0P5SM1P0SQ-NSP	single_brd[22C8]
FD2	FIDUCIAL_0P5SM1P0SQ-NSP	single_brd[22C8]
FD3	FIDUCIAL_0P5SM1P0SQ-NSP	single_brd[22B8]
FD4	FIDUCIAL_0P5SM1P0SQ-NSP	single_brd[22B8]
FD5	FIDUCIAL_0P5SM1P0SQ-NSP	single_brd[22B8]
FD6	FIDUCIAL_0P5SM1P0SQ-NSP	single_brd[22B8]
FD7	FIDUCIAL_0P5SM1P0SQ-NSP	single_brd[22B8]
FL1	FILTER_2P_01005	single_brd[17C7]
FL1_RF	FILTER_2P_01005-1	radio_mlb[50C7]single_brd[24]
FL2	FILTER_2P_01005	single_brd[11B7]
FL2_RF	FILTER_SAW_LMTPFJGAE50_LGA	radio_mlb[43C3]single_brd[24]
FL3	FILTER_2P_01005	single_brd[8B6]
FL4	FILTER_2P_01005	single_brd[11B7]
FL4_RF	FILTER_2P_01005-1	radio_mlb[39B7]single_brd[24]
FL5	FILTER_2P_01005	single_brd[17B7]
FL6	FILTER_2P_0402	single_brd[15C2]
FL6_RF	FILTER_SAW_2UNB2BAL_10P_LGA-1	radio_mlb[43B4]single_brd[24]
FL7	FILTER_2P_01005	single_brd[8B6]
FL8	FILTER_2P_01005	single_brd[8B6]
FL9	FILTER_2P_0402	single_brd[15C2]
FL9_RF	FIL_COUPLER_6P_0805-6SM	radio_mlb[50B2]single_brd[24]
FL10	FILTER_2P_01005	single_brd[17C7]
FL10_RF	FIL_COUPLER_6P1_0805-6SM	radio_mlb[50C2]single_brd[24]
FL11	FILTER_2P_01005	single_brd[22D6]
FL12	FILTER_2P_01005-1	single_brd[11D7]
FL13	FILTER_2P_01005	single_brd[11D7]
FL14	FILTER_2P_01005-1	single_brd[11C7]
FL15	FILTER_2P_01005-1	single_brd[11D7]
FL16	FILTER_2P_01005	single_brd[17C6]
FL17	FILTER_2P_01005	single_brd[17C6]
FL19	FILTER_2P_0201	single_brd[17D2]
FL20	FILTER_2P_01005	single_brd[11B7]
FL21	FILTER_2P_01005	single_brd[8D3]
FL22	FILTER_2P_01005	single_brd[21A6]
FL23	FILTER_2P_01005-1	single_brd[11C2]
FL24	FILTER_2P_0201-1	single_brd[19B3]
FL25	FILTER_2P_0201-1	single_brd[19A3]
FL26	FILTER_2P_0201-1	single_brd[19A3]
FL27	FILTER_2P_0201-1	single_brd[19D3]
FL28	FILTER_2P_01005	single_brd[21A6]
FL29	FILTER_2P_01005-1	single_brd[21B6]
FL30	FILTER_2P_01005-1	single_brd[21B6]
FL31	FILTER_2P_01005-1	single_brd[21B6]
FL32	FILTER_2P_01005	single_brd[17D2]
FL33	FILTER_2P_01005-1	single_brd[17D6]
FL34	FILTER_2P_01005	single_brd[19C3]
FL35	FILTER_2P_01005	single_brd[19D3]
FL36	FILTER_2P_01005	single_brd[19C3]
FL37	FILTER_2P_0201-1	single_brd[19D3]
FL38	FILTER_2P_01005	single_brd[20B7]
FL39	FILTER_2P_01005	single_brd[20B5]
FL40	FILTER_2P_01005	single_brd[20D7]
FL41	FILTER_2P_01005	single_brd[20D4]
FL42	FILTER_2P_01005	single_brd[20D7]
FL43	FILTER_2P_01005-1	single_brd[21B6]
FL44	FILTER_2P_01005-1	single_brd[11D3]
FL45	FILTER_2P_01005	single_brd[11C7]
FL46	FILTER_2P_01005	single_brd[8B6]
FL47	FILTER_2P_01005	single_brd[8C3]
FL48	FILTER_2P_01005	single_brd[11B2]
FL49	FILTER_2P_01005	single_brd[17B7]
FL50	FILTER_2P_01005	single_brd[17D2]
FL51	FILTER_2P_01005-1	single_brd[11A7]
FL52	FILTER_2P_01005-1	single_brd[11A7]
FL53	FILTER_2P_01005-1	single_brd[17A3]
FL54	FILTER_2P_01005-1	single_brd[17D6]
FL55	FILTER_2P_01005	single_brd[20D4]
FL56	FILTER_2P_01005	single_brd[20D4]
FL57	FILTER_2P_01005	single_brd[11B7]
FL58	FILTER_2P_01005	single_brd[11C7]
FL59	FILTER_2P_01005	single_brd[17D2]
FL60	FILTER_2P_01005-1	single_brd[17A3]

FL61	FILTER_2P_01005-1	single_brd[19D3]
FL62	FILTER_2P_01005	single_brd[19B3]
FL63	FILTER_2P_01005	single_brd[17D2]
FL64	FILTER_2P_01005-1	single_brd[11A7]
FL65	FILTER_2P_01005-1	single_brd[11A7]
FL66	FILTER_2P_01005	single_brd[17D6]
FL67	FILTER_2P_0201	single_brd[5A5]
FL68	FILTER_2P_01005	single_brd[17B7]
FL69	FILTER_2P_01005	single_brd[17C7]
FL74	FILTER_2P_01005-1	single_brd[8C6]
FL1701_RF	FILTER_3P5_LFE18832MHC1D449	radio_mlb[53D7]single_brd[24]
FL2302	FILTER_2P_01005	single_brd[17C2]
J1	CON_F34ST_D6MT_SM_F-ST-SM	single_brd[11C5]
J1_RF	CON_M54ST_D4MT_SM_M-ST-SM	radio_mlb[35D2]single_brd[24]
J2	CON_M18ST_D4MT_SM_M-ST-SM	single_brd[8C4]
J2_RF	CON_F1ST_COAX_S3MT_SM_F-ST-SM	radio_mlb[35B2]single_brd[24]
J3	CON_M32ST_D4MT_SM_M-ST-SM	single_brd[21C4]
J3_RF	CON_F1ST_COAX_S3MT_SM_F-ST-SM	radio_mlb[35B2]single_brd[24]
J4	CON_M42ST_D6MT_SM_M-ST-SM-COMBO	single_brd[18A7]
J4_RF	CON_F1ST_COAX_S3MT_SM_F-ST-SM	radio_mlb[53B8]single_brd[24]
J5	CON_M22ST_D4MT_SM_M-ST-SM	single_brd[19C5]
J5_RF	CON_F1ST_COAX_S3MT_SM_F-ST-SM	radio_mlb[53C3]single_brd[24]
J6	CON_F6ST_6MT_BATT_SM_F-ST-SM	single_brd[22D7]
J6_RF	CON_F1ST_COAX_S3MT_SM_F-ST-SM	radio_mlb[53C3]single_brd[24]
J7	CON_M38ST_D4MT_SM_M-ST-SM	single_brd[17C4]
J10_RF	CON_F1ST_COAX_S3MT_SM_F-ST-SM	radio_mlb[56D4]single_brd[24]
J11_RF	CON_F6ST_6MT_SIMCARD_SM3_F-ST-SM	radio_mlb[35A6]single_brd[24]
L1	IND_0402	single_brd[14B3]
L1_RF	IND_0806	radio_mlb[36D3]single_brd[24]
L2_RF	IND_0806	radio_mlb[36C3]single_brd[24]
L3	IND_P_VLF302510T-SM	single_brd[14B7]
L3_RF	IND_0806	radio_mlb[36C3]single_brd[24]
L4	IND_TFA252010-SM	single_brd[15C6]
L4_RF	IND_0806	radio_mlb[36D3]single_brd[24]
L5	IND_P_TFA201610G-SM	single_brd[15B6]
L5_RF	IND_P_2520-SM	radio_mlb[36C3]single_brd[24]
L6	IND_0201	single_brd[17C2]
L6_RF	IND_01005	radio_mlb[53C6]single_brd[24]
L7	IND_0201	single_brd[17C2]
L7_RF	IND_01005	radio_mlb[47C6]single_brd[24]
L8	IND_P_TFA201610G-PSE20161T2R2	single_brd[12C7]
L8_RF	IND_03015	radio_mlb[53C4]single_brd[24]
L9	IND_P_TFA201610G-SM	single_brd[12D4]
L9_RF	IND_0603	radio_mlb[56B6]single_brd[24]
L10	IND_P_TFA201610G-SM	single_brd[12D4]
L10_RF	IND_01005	radio_mlb[47B6]single_brd[24]
L11	IND_P_TFA201610G-SM	single_brd[12D4]
L11_RF	IND_01005	radio_mlb[44C6]single_brd[24]
L12	IND_P_TFA201610G-SM	single_brd[12D4]
L12_RF	IND_01005	radio_mlb[44B6]single_brd[24]
L13	IND_P_TFA201610G-SM	single_brd[12C4]
L13_RF	IND_01005	radio_mlb[50C7]single_brd[24]
L14	IND_P_TFA201610G-SM	single_brd[12C4]
L14_RF	IND_01005	radio_mlb[45C7]single_brd[24]
L15	IND_P_TFA201610G-SM	single_brd[12C4]
L15_RF	IND_01005	radio_mlb[45B6]single_brd[24]
L16	IND_P_TFA201610G-SM	single_brd[12D2]
L16_RF	IND_01005	radio_mlb[46C7]single_brd[24]
L17	IND_P_TFA201610G-SM	single_brd[12D2]
L17_RF	IND_01005	radio_mlb[46C6]single_brd[24]
L18	IND_P_PIFE20161T-SM	single_brd[12C2]
L18_RF	IND_01005	radio_mlb[48C6]single_brd[24]
L19	IND_P_TFA201610G-SM	single_brd[14D6]
L19_RF	IND_01005	radio_mlb[48B6]single_brd[24]
L20	IND_0201	radio_mlb[52B6]single_brd[24]
L21	IND_PSB12101T-SM	single_brd[18B3]
L21_RF	IND_P_MAKK2016-SM	radio_mlb[49C4]single_brd[24]
L22_RF	IND_0201	radio_mlb[48C2]single_brd[24]
L23_RF	IND_0201	radio_mlb[50B3]single_brd[24]
L24	IND_0201	radio_mlb[50C3]single_brd[24]
L28	IND_0201	single_brd[21C6]
L29	IND_0201	single_brd[21D6]
L30	IND_0201	single_brd[21C5]
L33	FILTER_4P_TCM0605-1	single_brd[21C2]
L33_RF	CAP_0201	radio_mlb[56D3]single_brd[24]
L34	FILTER_4P_TCM0605-1	single_brd[21C2]
L35	FILTER_4P_TCM0605-1	single_brd[11D2]
L36	FILTER_4P_TCM0605-1	single_brd[21B2]
L36	IND_0201DS	radio_mlb[42B7]single_brd[24]
L37	FILTER_4P_TCM0605-1	single_brd[21B2]
L37	IND_0201	radio_mlb[42B7]single_brd[24]
L38	FILTER_4P_TCM0605-1	single_brd[21B2]
L38	IND_0201DS	radio_mlb[42B6]single_brd[24]
L39	FILTER_4P_TCM0605-1	single_brd[11D2]
L39	IND_0201	radio_mlb[42B6]single_brd[24]
L41	FILTER_4P_TCM0605-1	single_brd[19C7]
L42	FILTER_4P_TCM0605-1	single_brd[19C7]
L44	FILTER_4P_TCM0605-1	single_brd[19C7]
L44	IND_0201	radio_mlb[42B3]single_brd[24]
L45	IND_0201	radio_mlb[42B3]single_brd[24]
L46	IND_0201	radio_mlb[42A3]single_brd[24]
L49	IND_0201	radio_mlb[42B3]single_brd[24]
L50	IND_0201	radio_mlb[42B3]single_brd[24]
L51	IND_0201	radio_mlb[42A3]single_brd[24]
L52	IND_0201	radio_mlb[42A3]single_brd[24]
L53_RF	IND_0201	radio_mlb[43B2]single_brd[24]
L54_RF	IND_0201	radio_mlb[43B2]single_brd[24]
L55_RF	IND_0201	radio_mlb[43B2]single_brd[24]
L57_RF	IND_0201	radio_mlb[50B1]single_brd[24]
L64_RF	IND_0201	radio_mlb[43B5]single_brd[24]
L65_RF	IND_0201	radio_mlb[43B5]single_brd[24]
L66_RF	IND_01005	radio_mlb[53C6]single_brd[24]
L67_RF	IND_01005	radio_mlb[53C6]single_brd[24]
L68_RF	IND_01005	radio_mlb[53C6]single_brd[24]
L69_RF	IND_01005	radio_mlb[53D3]single_brd[24]
L70_RF	IND_0201	radio_mlb[44C3]single_brd[24]
L71_RF	IND_0201	radio_mlb[45C3]single_brd[24]

L72_RF	IND_0201	radio_mlb[45B3]single_brd[24]
L73_RF	IND_0201	radio_mlb[46C3]single_brd[24]
L74_RF	IND_0201	radio_mlb[47C3]single_brd[24]
L75_RF	IND_0201	radio_mlb[47B3]single_brd[24]
L77_RF	IND_01005	radio_mlb[48B3]single_brd[24]
L78_RF	IND_0201	radio_mlb[50B3]single_brd[24]
L79_RF	IND_0201	radio_mlb[51C7]single_brd[24]
L1732_RF	IND_03015	radio_mlb[53D6]single_brd[24]
PP1_RF	PROBEPOINT_SM	radio_mlb[35D7]single_brd[24]
PP2	PROBEPOINT_SM	single_brd[6B8]
PP2_RF	PROBEPOINT_SM	radio_mlb[35D7]single_brd[24]
PP3	PROBEPOINT_SM	single_brd[6A8]
PP3_RF	PROBEPOINT_SM	radio_mlb[35D7]single_brd[24]
PP4_RF	PROBEPOINT_SM	radio_mlb[35B6]single_brd[24]
PP5_RF	PROBEPOINT_SM	radio_mlb[35B6]single_brd[24]
PP6_RF	PROBEPOINT_SM	radio_mlb[35B6]single_brd[24]
PP7	PROBEPOINT_SM	single_brd[18B8]
PP7_RF	PROBEPOINT_SM	radio_mlb[35B6]single_brd[24]
PP8	PROBEPOINT_SM	single_brd[18B8]
PP8_RF	PROBEPOINT_SM	radio_mlb[35D6]single_brd[24]
PP9	PROBEPOINT_SM	single_brd[18B5]
PP9_RF	PROBEPOINT_SM	radio_mlb[35D6]single_brd[24]
PP10	PROBEPOINT_SM	single_brd[6A8]
PP10_RF	PROBEPOINT_SM	radio_mlb[35D6]single_brd[24]
PP11	PROBEPOINT_SM	single_brd[18B1]
PP11_RF	PROBEPOINT_SM	radio_mlb[35C7]single_brd[24]
PP12_RF	PROBEPOINT_SM	radio_mlb[35D6]single_brd[24]
PP13	PROBEPOINT_SM	single_brd[3D1]
PP13_RF	PROBEPOINT_SM	radio_mlb[35C6]single_brd[24]
PP14_RF	PROBEPOINT_SM	radio_mlb[35C7]single_brd[24]
PP15	PROBEPOINT_SM	single_brd[3D1]
PP15_RF	PROBEPOINT_SM	radio_mlb[35C7]single_brd[24]
PP16_RF	PROBEPOINT_SM	radio_mlb[35C6]single_brd[24]
PP17	PROBEPOINT_SM	single_brd[6B4]
PP17_RF	PROBEPOINT_SM	radio_mlb[35C7]single_brd[24]
PP18	PROBEPOINT_SM	single_brd[18B1]
PP18_RF	PROBEPOINT_SM	radio_mlb[35C7]single_brd[24]
PP19	PROBEPOINT_SM	single_brd[6B4]
PP19_RF	PROBEPOINT_SM	radio_mlb[35C7]single_brd[24]
PP20_RF	PROBEPOINT_SM	radio_mlb[35C7]single_brd[24]
PP21_RF	PROBEPOINT_SM	radio_mlb[35C7]single_brd[24]
PP22	PROBEPOINT_SM	single_brd[16C2]
PP22_RF	PROBEPOINT_SM	radio_mlb[35C7]single_brd[24]
PP23	PROBEPOINT_SM	single_brd[2C7]
PP24	PROBEPOINT_SM	single_brd[2B7]
PP40_RF	PROBEPOINT_SM	radio_mlb[35B7]single_brd[24]
PP41_RF	PROBEPOINT_SM	radio_mlb[35B7]single_brd[24]
PP42_RF	PROBEPOINT_SM	radio_mlb[35B7]single_brd[24]
PP43_RF	PROBEPOINT_SM	radio_mlb[35B7]single_brd[24]
PP44_RF	PROBEPOINT_SM	radio_mlb[35B7]single_brd[24]
PP45_RF	PROBEPOINT_SM	radio_mlb[35B7]single_brd[24]
PP46_RF	PROBEPOINT_SM	radio_mlb[35B7]single_brd[24]
PP47_RF	PROBEPOINT_SM	radio_mlb[35B7]single_brd[24]
Q1	TRA_MOSFET_NCHN_3P3_DFN1006H4-3	single_brd[11B4]
Q2	TRA_MOSFET_PCHN_4P5_BGA	single_brd[17A6]
Q4	TRA_MOSFET_PCHN_9P2_BGA	single_brd[12C8]
Q1600	TRA_MOSFET_NCHN_3P11_DFN0806-VML0806-COMBO-N78	single_brd[16A3]
R1	RES_01005	single_brd[2C6]
R1_RF	RES_01005	radio_mlb[35C1]single_brd[24]
R2	RES_01005	single_brd[18A3]
R3	RES_01005	single_brd[11A6]
R3_RF	RES_01005	radio_mlb[35A5]single_brd[24]
R4_RF	RES_01005	radio_mlb[39C4]single_brd[24]
R5	RES_01005	single_brd[3C4]
R5_RF	RES_01005	radio_mlb[53C7]single_brd[24]
R6	RES_01005	single_brd[2B3]
R6_RF	RES_01005	radio_mlb[38B6]single_brd[24]
R7	RES_01005	single_brd[2C3]
R7_RF	RES_01005	radio_mlb[38A5]single_brd[24]
R8	RES_01005	single_brd[6B2]
R9	RES_01005	single_brd[11A6]
R9_RF	RES_01005	radio_mlb[38B2]single_brd[24]
R10	RES_01005	single_brd[17C3]
R10_RF	RES_01005	radio_mlb[38D1]single_brd[24]
R11	RES_01005	single_brd[12D4]
R12	RES_01005	single_brd[3A6]
R12	RES_0201	radio_mlb[52B5]single_brd[24]
R13_RF	RES_201	radio_mlb[56D2]single_brd[24]
R14_RF	RES_01005	radio_mlb[56A7]single_brd[24]
R15	RES_01005	single_brd[17C6]
R15_RF	RES_01005	radio_mlb[56A7]single_brd[24]
R16	RES_01005	single_brd[3D4]
R16_RF	RES_01005	radio_mlb[56C5]single_brd[24]
R17	RES_01005	single_brd[3D2]
R17_RF	RES_01005	radio_mlb[56C3]single_brd[24]
R18	RES_01005	single_brd[3D2]
R18_RF	RES_01005	radio_mlb[56C3]single_brd[24]
R19	RES_01005	single_brd[3D2]
R19_RF	RES_201	radio_mlb[41D3]single_brd[24]
R20	RES_01005	single_brd[3A3]
R20_RF	RES_01005	radio_mlb[37C8]single_brd[24]
R21	RES_01005	single_brd[3D2]
R21_RF	RES_01005	radio_mlb[37C8]single_brd[24]
R22	RES_01005	single_brd[3A3]
R22_RF	RES_01005	radio_mlb[37B5]single_brd[24]
R23	RES_01005	single_brd[17C3]
R23	RES_01005	radio_mlb[37D4]single_brd[24]
R24	RES_01005	radio_mlb[37D4]single_brd[24]
R25_RF	RES_01005	radio_mlb[37D3]single_brd[24]
R26	RES_01005	single_brd[18C7]
R26_RF	RES_01005	radio_mlb[37D3]single_brd[24]
R27	RES_01005	single_brd[4A8]
R27_RF	RES_01005	radio_mlb[40C4]single_brd[24]
R28	RES_01005	single_brd[4A8]
R28_RF	RES_01005	radio_mlb[40C2]single_brd[24]
R29	RES_01005	single_brd[4A6]
R29_RF	RES_01005	radio_mlb[40C2]single_brd[24]
R30	RES_01005	single_brd[4A6]
R30_RF	RES_01005	radio_mlb[40C1]single_brd[24]
R31	RES_01005	single_brd[4A5]
R32	RES_01005	single_brd[4A5]
R33	RES_01005	single_brd[4A4]
R33_RF	RES_01005	radio_mlb[49C7]single_brd[24]
R34	RES_01005	single_brd[4A4]
R34_RF	RES_01005	radio_mlb[49C6]single_brd[24]
R35	RES_01005	single_brd[15C5]
R35_RF	RES_01005	radio_mlb[50B2]single_brd[24]
R36	RES_01005	single_brd[18A4]
R37	RES_01005	single_brd[7C5]

FOXCONN RD-EE

R38	RES_01005	single_brd[7C5]
R39	RES_01005	single_brd[7C5]
R40	RES_01005	single_brd[7B5]
R41	RES_01005	single_brd[7C5]
R42	RES_01005	single_brd[7C5]
R43	RES_201	single_brd[16D5]
R43_RF	RES_01005	radio_mlb[56A6]single_brd[24]
R44	RES_201	single_brd[16D5]
R44_RF	RES_01005	radio_mlb[56A6]single_brd[24]
R45	RES_201	single_brd[11B4]
R46	RES_01005	single_brd[19C3]
R46	RES_01005	radio_mlb[42D5]single_brd[24]
R47	RES_01005	radio_mlb[42D5]single_brd[24]
R48	RES_01005	radio_mlb[42C5]single_brd[24]
R50	RES_01005	single_brd[17C6]
R51_RF	RES_01005	radio_mlb[56A5]single_brd[24]
R52	RES_01005	single_brd[3C8]
R52_RF	RES_01005	radio_mlb[56A5]single_brd[24]
R53_RF	RES_201	radio_mlb[41D8]single_brd[24]
R55	RES_01005	single_brd[6B5]
R55_RF	RES_01005	radio_mlb[50B8]single_brd[24]
R57	THERMISTER_0201	single_brd[13A8]
R58	RES_201	single_brd[17A7]
R65	RES_01005	single_brd[13C3]
R67	RES_01005	single_brd[2B7]
R70	RES_01005	single_brd[12D8]
R71	RES_01005	single_brd[2C3]
R72	RES_01005	single_brd[4D8]
R73	RES_01005	single_brd[4D8]
R78	RES_01005	single_brd[6C8]
R79	RES_01005	single_brd[18B5]
R82	RES_01005	single_brd[6C6]
R83	RES_01005	single_brd[16D5]
R84	RES_01005	single_brd[16C5]
R85	RES_01005	single_brd[11B3]
R86	RES_01005	single_brd[18C5]
R87	RES_01005	single_brd[13B3]
R90	THERMISTER_0201	single_brd[13B8]
R94	RES_01005	single_brd[11A7]
R95	RES_01005	single_brd[11A7]
R100	RES_01005	single_brd[10B8]
R102	RES_01005	single_brd[9B3]
R103	RES_01005	single_brd[9B3]
R107	RES_01005	single_brd[17D7]
R108	THERMISTER_0201	single_brd[13C8]
R109	RES_0201	single_brd[13B6]
R110	THERMISTER_0201	single_brd[13B8]
R112	RES_01005	single_brd[13B3]
R113	RES_01005	single_brd[13B3]
R114	RES_01005	single_brd[13B3]
R115	RES_01005	single_brd[12C4]
R116	RES_201	single_brd[13D4]
R117	RES_01005	single_brd[12C4]
R119	RES_01005	single_brd[12B1]
R125	RES_01005	single_brd[11C7]
R129	RES_01005	single_brd[15C7]
R130	RES_01005	single_brd[17A3]
R131	RES_01005	single_brd[13C3]
R136	RES_01005	single_brd[18B7]
R137	RES_01005	single_brd[6C5]
R141	RES_01005	single_brd[21A5]
R143	RES_01005	single_brd[6C5]
R145	RES_01005	single_brd[10C3]
R152	RES_01005	single_brd[19C3]
R153	RES_01005	single_brd[6B8]
R154	RES_01005	single_brd[20C7]
R155	RES_01005	single_brd[13C3]
R156	RES_01005	single_brd[13C3]
R157	RES_01005	single_brd[8D2]
R158	RES_01005	single_brd[16A8]
R159	RES_01005	single_brd[16A7]
R160	RES_01005	single_brd[6C2]
R161	RES_01005	single_brd[6C2]
R162	RES_01005	single_brd[3B8]
R163	RES_01005	single_brd[2B3]
R164	RES_01005	single_brd[2B3]
R169	RES_01005	single_brd[21C6]
R399	RES_01005	single_brd[3B4]
R1600	RES_01005	single_brd[16A4]
R1601	RES_01005	single_brd[16A4]
R1602	RES_01005	single_brd[16A4]
R1603	RES_01005	single_brd[16A4]
R1604	RES_01005	single_brd[16B3]
R1605	RES_01005	single_brd[16A3]
R3000	RES_01005	single_brd[3A6]
R3001	RES_01005	single_brd[3A6]
R3301	RES_01005	single_brd[18D4]
SH1	SHLD_1P_SM	single_brd[22C7]
SH2	SHLD_1P_SM	single_brd[22C7]
SH3	SHLD_1P_SM	single_brd[22B7]
SH4	SHLD_1P_SM	single_brd[22B7]
SP1	SPRING_CLIP_1P_CLIP-SM	single_brd[22C5]
SP1_RF	SMT_PAD_SM-NSP	radio_mlb[53D8]single_brd[24]
SP2	SMT_PAD_SM-NSP	radio_mlb[52B7]single_brd[24]
SP3	SPRING_CLIP_1P_CLIP-SM	radio_mlb[52B7]single_brd[24]
TP1	TP_TP-P6	single_brd[22D4]
TP1_RF	TP_TP-P6	radio_mlb[53C3]single_brd[24]
TP2	TP_TP-P90	single_brd[22D4]
TP3	TP_TP-P6	single_brd[22A2]
TP4	TP_TP-P6	single_brd[22D4]
TP5	TP_TP-P6	single_brd[22C4]
TP6	TP_TP-P6	single_brd[22C4]
TP7	TP_TP-P6	single_brd[22C4]
TP9	TP_TP-P6	single_brd[22B4]
TP10	TP_TP-P6	single_brd[22C2]
TP11	TP_TP-P6	single_brd[22A2]
TP12	TP_TP-P80	single_brd[22D4]
TP15	TP_TP-P6	single_brd[22B2]
TP16	TP_TP-P6	single_brd[22B2]
TP17	TP_TP-P6	single_brd[22B2]
TP18	TP_TP-P6	single_brd[22A4]
TP19	TP_TP-P6	single_brd[22A4]
TP20	TP_TP-P6	single_brd[22A4]
TP21	TP_TP-P55	single_brd[22D2]
TP22	TP_TP-P55	single_brd[22D2]
TP23	TP_TP-P55	single_brd[22D2]
TP24	TP_TP-P55	single_brd[22C2]
TP26	TP_TP-P6	single_brd[22C2]
TP27	TP_TP-P6	single_brd[22C2]
TP28	TP_TP-P6	single_brd[22B4]
TP29	TP_TP-P6	single_brd[22B4]
TP32	TP_TP-P6	single_brd[22C2]

TP40	TP_TP-P55	single_brd[22C4]
TP120	TP_TP-P55	single_brd[22D4]
TP200	TP_TP-P6	single_brd[22D4]
TP2200	TP_TP-P6	single_brd[22C2]
TP2202	TP_TP-P6	single_brd[22B2]
TP8000	TP_TP-P6	single_brd[22B4]
U1	H6P_FCMSP	single_brd[2C5]
U1	H6P_FCMSP	single_brd[3D3 3D7]
U1	H6P_FCMSP	single_brd[4D2 4D5 4D7]
U1	H6P_FCMSP	single_brd[5D2 5D4 5D8 5D7]
U1	H6P_FCMSP	single_brd[6C7]
U1	H6P_FCMSP	single_brd[7C3 7C7]
U1_RF	MODEM_MDM9615M_1_BGA	radio_mlb[38B4 38D2 38D4 38C7]single_brd[24]
U1_RF	MODEM_MDM9615M_1_BGA	radio_mlb[39C3 39D7]single_brd[24]
U2	CBTL1610_WLCSP36_WLCSP	single_brd[16D4]
U2_RF	PM8018_WLNSP105_BGA	radio_mlb[36C5]single_brd[24]
U2_RF	PM8018_WLNSP105_BGA	radio_mlb[37D3 37B7 37B4 37C7]single_brd[24]
U3	TPS65730_CHESTNUT_BGA	single_brd[14D5]
U3_RF	WTR1605_SM	radio_mlb[40D4 40B7 40D7 40C7]single_brd[24]
U3_RF	WTR1605_SM	radio_mlb[41B3]single_brd[24]
U4	FLASH_XGX8_60LGA_LGA-12X17	single_brd[6C4]
U5	74AUP2G3404_SOT1115	single_brd[18A3]
U5_RF	SUPPR_TPD4E101_SON4	radio_mlb[35A3]single_brd[24]
U6	CAT24C08_WLCSP4_WLCSP	single_brd[16B8]
U6_RF	FLASH_MX25U1635E_WLCSP	radio_mlb[39A7]single_brd[24]
U7	AMBER_PMC_FCCSP-0.84MM	single_brd[12D6]
U7	AMBER_PMC_FCCSP-0.84MM	single_brd[13C2 13C5]
U7_RF	RF1112_WLCSP	radio_mlb[53C5]single_brd[24]
U8	AP3GDL20HAB18_LGA	single_brd[20D2]
U8_RF	MOD_WIFI_BT_IMPERIAL_LGA60_LGA	radio_mlb[56C5]single_brd[24]
U9	OSCAR1_FCLGA	single_brd[20C6 20D6]
U9_RF	MOD_HFQSMXXFA_LGA	radio_mlb[43C7]single_brd[24]
U10	LM3638_BGA	single_brd[14B3]
U11_RF	MAX77100_WLP	radio_mlb[49C5]single_brd[24]
U12	CUMULUS_BGA63_WLBGA	single_brd[18C6]
U12_RF	FIL_HMD809J_SM	radio_mlb[56D2]single_brd[24]
U13	TPS22924_CSP	single_brd[21C6]
U14_RF	AMP_TQM6M6314_LGA	radio_mlb[44C5]single_brd[24]
U15	SAGE2_1_CSP	single_brd[18D3]
U16	AK8963C_CSP-POP	single_brd[20A6]
U16_RF	MOD_HFQSWXXUA_LGA	radio_mlb[51C5]single_brd[24]
U17	LM3564_WLCSP	single_brd[15B5]
U18	AP2DHAB24_LGA	single_brd[20B2]
U20	AMP_SKY65736_LGA	radio_mlb[52C4]single_brd[24]
U21	CS42L67_WLCSP	single_brd[9C5]
U21	CS42L67_WLCSP	single_brd[10D2 10C6]
U22	CS35L19B_WLCSP	single_brd[15C6]
U23	LM3534_BGA	single_brd[14B7]
U23_RF	AMP_AFEM792503_LGA	radio_mlb[45C5]single_brd[24]
U25	74LVC1G34_SOT1226	single_brd[3A3]
U26	74LVC1G34_SOT1226	single_brd[3A3]
U58_RF	AMP_DUPLEXER_BAND58_LGA30_LGA	radio_mlb[47C5]single_brd[24]
U207_RF	AMP_DUPLEXER_BAND20_LGA30_LGA	radio_mlb[46C5]single_brd[24]
U210	LREG_LP5907_USMD	single_brd[21C7]
U1317_RF	AMP_RF3763_LGA	radio_mlb[48C5]single_brd[24]
U1600	COMPARATOR_MAX9039_UCSP	single_brd[16A4]
U1700	TPS22904_CSP	single_brd[17D8]
U2000_RF	AMP_SKY77572_LGA	radio_mlb[50C6]single_brd[24]
XW1	SHORT10LP1_WITH_ALTS_SHORT-10L-0.1MM-SM	single_brd[12A7]
XW1_RF	SHORT10LP25_WITH_ALTS_SHORT-10L-0.25MM-SM	radio_mlb[37B6]single_brd[24]
XW2_RF	SHORT10LP25_WITH_ALTS_SHORT-10L-0.25MM-SM	radio_mlb[37B6]single_brd[24]
XW3	SHORT10LP1_WITH_ALTS_SHORT-10L-0.1MM-SM	single_brd[12C2]
XW3_RF	SHORT10LP25_WITH_ALTS_SHORT-10L-0.25MM-SM	radio_mlb[37B6]single_brd[24]
XW4	SHORT10LP1_WITH_ALTS_SHORT-10L-0.1MM-SM	single_brd[13B6]
XW4_RF	SHORT10LP25_WITH_ALTS_SHORT-10L-0.25MM-SM	radio_mlb[37B6]single_brd[24]
XW5	SHORT10LP1_WITH_ALTS_SHORT-10L-0.1MM-SM	single_brd[8C3]
XW6	SHORT10LP1_WITH_ALTS_SHORT-10L-0.1MM-SM	single_brd[13B6]
XW6_RF	SHORT10LP25_WITH_ALTS_SHORT-10L-0.25MM-SM	radio_mlb[49B4]single_brd[24]
XW7	SHORT_SM	single_brd[11C3]
XW8	SHORT10LP1_WITH_ALTS_SHORT-10L-0.1MM-SM	single_brd[13B6]
XW8_RF	SHORT10LP25_WITH_ALTS_SHORT-10L-0.25MM-SM	radio_mlb[49B4]single_brd[24]
XW9	SHORT10LP1_WITH_ALTS_SHORT-10L-0.1MM-SM	single_brd[13B6]
XW9_RF	SHORT_LAYER_9_SHORT-L9-SM	radio_mlb[56D6]single_brd[24]
XW10	SHORT_SM	single_brd[12B1]
XW10_RF	SHORT10LP1_WITH_ALTS_SHORT-10L-0.1MM-SM	radio_mlb[37A4]single_brd[24]
XW11	SHORT10LP1_WITH_ALTS_SHORT-10L-0.1MM-SM	single_brd[13B6]
XW11_RF	SHORT_SHORT-01005	radio_mlb[56C7]single_brd[24]
XW12	SHORT10LP25_WITH_ALTS_SHORT-10L-0.25MM-SM	single_brd[22D7]
XW12_RF	SHORT10LP1_WITH_ALTS_SHORT-10L-0.1MM-SM	radio_mlb[35A7]single_brd[24]
XW13	SHORT_SM	single_brd[17D4]
XW13_RF	SHORT10LP1_WITH_ALTS_SHORT-10L-0.1MM-SM	radio_mlb[35A7]single_brd[24]
XW14	SHORT10LP1_WITH_ALTS_SHORT-10L-0.1MM-SM	single_brd[13B6]
XW14_RF	SHORT10LP1_WITH_ALTS_SHORT-10L-0.1MM-SM	radio_mlb[35A7]single_brd[24]
XW15	SHORT10LP1_WITH_ALTS_SHORT-10L-0.1MM-SM	single_brd[13B6]

XW15_RF	SHORT10LP1_WITH_ALTS_SHORT-10L-0.1MM-SM	radio_mlb[35A7]single_brd[24]
XW16_RF	SHORT10LP25_WITH_ALTS_SHORT-10L-0.25MM-SM	radio_mlb[37A6]single_brd[24]
XW17_RF	SHORT10LP1_WITH_ALTS_SHORT-10L-0.1MM-SM	radio_mlb[36C5]single_brd[24]
XW18	SHORT10LP1_WITH_ALTS_SHORT-10L-0.1MM-SM	single_brd[12D2]
XW20	SHORT10LP1_WITH_ALTS_SHORT-10L-0.1MM-SM	single_brd[12D2]
XW20_RF	SHORT_LAYER_9_SHORT-L9-SM	radio_mlb[56D6]single_brd[24]
XW25	SHORT10LP1_WITH_ALTS_SHORT-10L-0.1MM-SM	single_brd[17B7]
XW28	SHORT_SM	single_brd[13B6]
XW29	SHORT_SM	single_brd[13B6]
XW31	SHORT_SM	single_brd[21C4]
XW33	SHORT10LP1_WITH_ALTS_SHORT-10L-0.1MM-SM	single_brd[13B6]
XW35	SHORT_LAYER_6_SHORT-L6-SM	single_brd[15D6]
XW36	SHORT_SM	single_brd[18D5]
XW41	SHORT10LP1_WITH_ALTS_SHORT-10L-0.1MM-SM	single_brd[8C3]
XW42	SHORT10LP1_WITH_ALTS_SHORT-10L-0.1MM-SM	single_brd[11C3]
XW43	SHORT10LP1_WITH_ALTS_SHORT-10L-0.1MM-SM	single_brd[10D7]
XW44	SHORT10LP1_WITH_ALTS_SHORT-10L-0.1MM-SM	single_brd[2C1]
XW45	SHORT10LP1_WITH_ALTS_SHORT-10L-0.1MM-SM	single_brd[17B6]
XW47_RF	SHORT10LP25_WITH_ALTS_SHORT-10L-0.25MM-SM	radio_mlb[49C6]single_brd[24]
XW48	SHORT10LP1_WITH_ALTS_SHORT-10L-0.1MM-SM	single_brd[10B5]
XW49	SHORT_SM	single_brd[15A5]
XW51	SHORT_SM	single_brd[13B7]
XW93	SHORT_SM	single_brd[3B2]
XW120	SHORT10LP1_WITH_ALTS_SHORT-10L-0.1MM-SM	single_brd[12C6]
XW1600	SHORT10LP1_WITH_ALTS_SHORT-10L-0.1MM-SM	single_brd[16B4]
Y1	CRYSTAL_4PIN1_1.60X1.20MM-SM	single_brd[2C2]
Y1_RF	CRYSTAL_4PIN2_2.0X1.6-SM	radio_mlb[37B4]single_brd[24]
Y2	CRYSTAL_2012-1	single_brd[12A7]

FOXCONN-RD-EE

1. ALL RESISTANCE VALUES ARE IN OHMS, 0.1 WATT +/- 5%.
2. ALL CAPACITANCE VALUES ARE IN MICROFARADS.
3. ALL CRYSTALS & OSCILLATOR VALUES ARE IN HERTZ.

REV	ECN	DESCRIPTION OF REVISION	CK APPD / DATE
8	0001837617	ENGINEERING RELEASED	2013-02-18

X145 RADIO_MLB SUBDESIGN - EVT1C 02/12/2013

PDF PAGE	CONTENTS
2	AP INTERFACE & DEBUG CONNECTORS
3	CELLULAR PMU: (1 OF 2)
4	CELLULAR PMU: (2 OF 2)
5	CELLULAR BASEBAND: (1 OF 2)
6	CELLULAR BASEBAND: (2 OF 2)
7	CELLULAR RF TRANSCEIVER: (1 OF 2)
8	CELLULAR RF TRANSCEIVER: (2 OF 2)
9	CELLULAR FRONT END: TX AND RX MATCHING
10	CELLULAR FRONT END: SAW BANKS
11	CELLULAR FRONT END: BAND 1/4 PAT
12	CELLULAR FRONT END: BAND 2/3 PAD
13	CELLULAR FRONT END: BAND 20 PAD
14	CELLULAR FRONT END: BAND 5/8 PAD
15	CELLULAR FRONT END: BAND 13/17 PAD
16	CELLULAR FRONT END: PA DCDC CONVERTER
17	CELLULAR FRONT END: 2G FEM
18	CELLULAR FRONT END: RX DIVERSITY
19	CELLULAR FRONT END: GPS LNA
20	CELLULAR FRONT END: ANTENNA FEEDS
21	FRONT END LOGIC TABLE (1 OF 2)
22	FRONT END LOGIC TABLE (2 OF 2)
23	WIFI/BT: MODULE AND FRONT END

FOXCONN RD-EE

BOARD_ID BOM OPTIONS

PART#	QTY	DESCRIPTION	REFERENCE DESIGNATOR(S)	CRITICAL	BOM OPTION
118S0621	1	1.00M 1% 01005	R25_RF	Y	N51_CFG_A
118S0732	1	50K 1% 01005	R26_RF	Y	N51_CFG_A
118S0159	1	470K 5% 01005	R25_RF	Y	N51_CFG_B
118S0626	1	100K 1% 01005	R26_RF	Y	N51_CFG_B
118S0626	1	100K 1% 01005	R25_RF	Y	N53_CFG_A
118S0726	1	162K 1% 01005	R26_RF	Y	N53_CFG_A
118S0626	1	100K 1% 01005	R25_RF	Y	N53_CFG_B
118S0623	1	267K 1% 01005	R26_RF	Y	N53_CFG_B
118S0659	1	255K 1% 01005	R25_RF	Y	N48_CFG_A
118S0626	1	100K 1% 01005	R26_RF	Y	N48_CFG_A
118S0689	1	147K 1% 01005	R25_RF	Y	N48_CFG_B
118S0626	1	100K 1% 01005	R26_RF	Y	N48_CFG_B
118S0626	1	100K 1% 01005	R25_RF	Y	N49_CFG_A
118S0650	1	499K 1% 01005	R26_RF	Y	N49_CFG_A
118S0732	1	50K 1% 01005	R25_RF	Y	N49_CFG_B
118S0621	1	1.00M 1% 01005	R26_RF	Y	N49_CFG_B

SCH :951-2446
BOM :939-0308
BOARD :920-2148

PART#	QTY	DESCRIPTION	REFERENCE DESIGNATOR(S)	CRITICAL	BOM OPTION
951-2446	1	X145_RADIO_MLB	SCH	Y	
825-2029	1	EEE FOR 939-0308	EEEE_????	Y	NA

CONFIDENTIAL AND PROPRIETARY APPLE SYSTEM DESIGN. FOR REFERENCE PURPOSE ONLY - NOT A CHANGE REQUEST

DRAWING TITLE: X145 RADIO_MLB SCHEMATIC

Apple Inc.

DRAWING NUMBER: 051-9478 SIZE: D

REVISION: 8.0.0

BRANCH

PAGE: 1 OF 23

SHEET: 34 OF 56

NOTICE OF PROPRIETARY PROPERTY:
THE INFORMATION CONTAINED HEREIN IS THE PROPRIETARY PROPERTY OF APPLE INC.
THE POSESSOR AGREES TO THE FOLLOWING:
I TO MAINTAIN THIS DOCUMENT IN CONFIDENCE
II NOT TO REPRODUCE OR COPY IT
III NOT TO REVEAL OR PUBLISH IT IN WHOLE OR PART
IV ALL RIGHTS RESERVED

AP INTERFACE & DEBUG CONNECTORS

AP CONNECTIONS

IN = FROM AP
OUT = TO AP

17 16 15 14 13 12 11 3	PP_BATT_VCC_CONN	OUT
23	PP_VCC_MAIN_WLAN	OUT
4	TX_GTR_THRESH	OUT
4	BB_RST_L	IN
6	RESET_DET_L	OUT
4	RADIO_ON_L	IN
4	RESET_PMU_L	IN
6	HOST_WAKE_BB	OUT
7	RF_RESET_L	OUT
6	PBL_RUN_BB_HSIC1_RDY	OUT
23	WLAN_HSIC3_RESUME	OUT
6	AP_WAKE_MODEM	OUT
6	AP_HSIC1_RDY	IN
5	50_HSIC_BB_DATA	IO
5	50_HSIC_BB_STROBE	IO
6	BB_HSIC1_REMOTE_WAKE	OUT
6	BB_UART_TXD	OUT
6	BB_UART_RXD	IN
6	BB_UART_RTS_L	OUT
6	BB_UART_CTS_L	IN
5	BB_USB_VBUS	IN
5	90_BB_USB_D_P	IO
5	90_BB_USB_D_N	IO
6	BB_I2S_CLK	IN
6	BB_I2S_WS	IN
6	BB_I2S_TXD	OUT
6	BB_I2S_RXD	IN
4	PP_SYNC	OUT
23	PP_WL_BT_VDDIO_AP	IN
23	CLK32K_AP	IN
23	WLAN_REG_ON	IN
23	WLAN_UART_TXD	OUT
23	WLAN_UART_RXD	IN
23	HOST_WAKE_WLAN	OUT
23	WLAN_HSIC3_DEVICE_RDY	OUT
23	AP_HSIC3_RDY	IN
23	50_HSIC_WLAN_DATA	IO
23	50_HSIC_WLAN_STROBE	IO
23	HOST_WAKE_BT	OUT
23	BT_WAKE	IN
23	BT_UART_TXD	OUT
23	BT_UART_RXD	IN
23	BT_UART_RTS_L	OUT
23	BT_UART_CTS_L	IN
23	BT_REG_ON	IN
23	BT_PCM_CLK	IO
23	BT_PCM_SYNC	IO
23	BT_PCM_OUT	IO
23	BT_PCM_IN	IO
6	LAT_SW1_CTL	OUT
6	LAT_SW2_CTL	OUT
20 6	BB_SPI_TO_PAC_CS	OUT
20 6	BB_SPI_TO_PAC_DATA_MOSI	OUT
20 6	BB_SPI_TO_PAC_CLK	OUT
20 6	PAC_TO_BB_SPI_DATA_MISO	IN
20 18 17 10 3	PP_LDO14_2V65	OUT
5 3	BB_JTAG_TCK	IN
5 3	BB_JTAG_TDI	IN
5 3	BB_JTAG_TMS	IN
5 3	BB_JTAG_TRST_L	IN
5 3	BB_JTAG_TDO	OUT
7	ADC_SMPS1_MSMC_1V05	OUT
7	ADC_SMPS3_MSME_1V8	OUT
7	ADC_LDO6_RUIM_1V8	OUT
7	ADC_LVS1	OUT
6	BB_IPC_GPIO	OUT
23 6	OSCAR_CONTEXT_A	IN
23 6	OSCAR_CONTEXT_B	IN

PROBE POINTS

PP1_RF (P4MM SM)	BB_ERROR_FLAG	6
PP2_RF (P3MM SM)	SLEEP_CLK_32K	4 5
PP3_RF (P4MM SM)	PMIC_SSBI	4 5
PP17_RF (P4MM-NSM SM)	19P2M_MDM	4 5
PP11_RF (P4MM SM)	CLK32K_AP	2 23
PP14_RF (P4MM SM)	AP_HSIC3_RDY	2 23
PP15_RF (P4MM SM)	WLAN_HSIC3_DEVICE_RDY	2 23
PP18_RF (P4MM SM)	WLAN_HSIC3_RESUME	2 23
PP19_RF (P4MM-NSM SM)	WTR_SSBI_TX_GPS	6 7
PP20_RF (P4MM-NSM SM)	WTR_SSBI_PRX_DRX	6 7
PP21_RF (P4MM SM)	WTR_RX_ON	6 7
PP22_RF (P4MM SM)	WTR_RF_ON	6 7
PP40_RF (P4MM SM)	WLAN_COEX_TXD	23
PP41_RF (P4MM SM)	LTE_COEX_TXD	6 23
PP42_RF (P4MM-NSM SM)	50_HSIC_BB_STROBE	2 5
PP43_RF (P4MM-NSM SM)	50_HSIC_BB_DATA	2 5
PP44_RF (P4MM SM)	50_HSIC_WLAN_STROBE	2 23
PP45_RF (P4MM SM)	50_HSIC_WLAN_DATA	2 23
PP46_RF (P4MM SM)	BT_UART_TXD	2 23
PP47_RF (P4MM SM)	BT_UART_RXD	2 23
PP8_RF (P4MM-NSM SM)	SIMCRD_RST_CONN	2 6
PP9_RF (P4MM-NSM SM)	SIMCRD_CLK_CONN	2 6
PP10_RF (P4MM SM)	SPI_DATA_MOSI	6
PP12_RF (P4MM SM)	SPI_CLK	6
PP13_RF (P4MM SM)	SPI_CS_L	6
PP16_RF (P4MM SM)	SPI_DATA_MISO	6
PP4_RF (P4MM SM)	BB_I2S_CLK	2 6
PP5_RF (P4MM SM)	BB_I2S_WS	2 6
PP6_RF (P4MM SM)	BB_I2S_RXD	2 6
PP7_RF (P4MM SM)	BB_I2S_TXD	2 6

DEBUG CONNECTOR

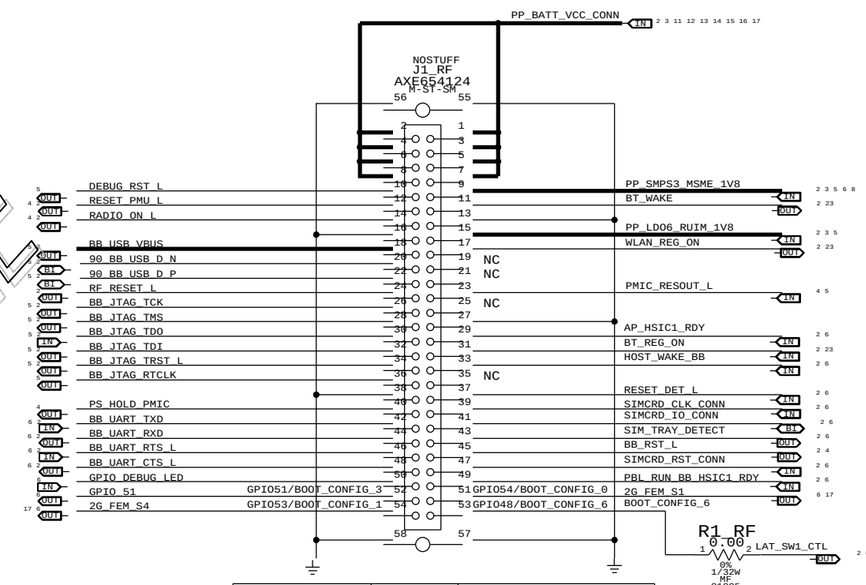

BOOT OPTIONS	BOOT_CONFIG SW REGISTER VALUE	GPIO/BOOT_CONFIG CONFIGURATION							
		6	5	4	3	2	1	0	
		47	48	49	50	51	52	53	54	55
BOOT_DEFAULT_OPTION	0X00	X	0	0	0	0	0	0	0	X
BOOT_NAND_OPTION	0X01	X	1	0	0	0	0	0	1	X
BOOT_HSIC_OPTION	0X02	X	1	0	0	0	0	1	0	X
BOOT_USB_OPTION	0X03	X	1	0	0	0	0	1	1	X
ENABLE SAHARA PROTOCOL	0X08	X	1	0	0	1	0	X	X	X

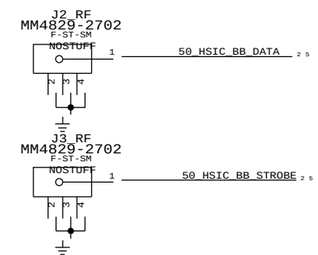

SIM CARD CONNECTOR

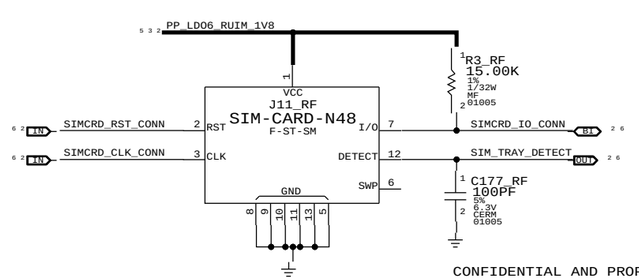

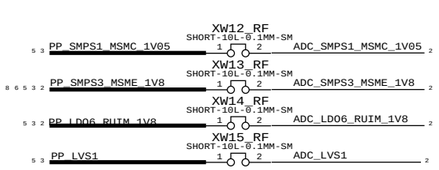

SIM CARD ESD PROTECTION

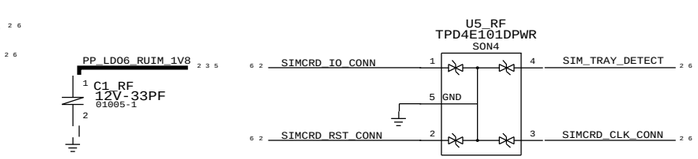

FOXCONN-RD-EE

CONFIDENTIAL AND PROPRIETARY APPLE SYSTEM DESIGN. FOR REFERENCE PURPOSE ONLY - NOT A CHANGE REQUEST

PAGE TITLE	AP INTERFACE & DEBUG CONNECTORS
Apple Inc.	DRAWING NUMBER 051-9478 SIZE D
	REVISION 8.0.0
	BRANCH
	PAGE 2 OF 23
	SHEET 35 OF 56

NOTICE OF PROPRIETARY PROPERTY:
THE INFORMATION CONTAINED HEREIN IS THE PROPRIETARY PROPERTY OF APPLE INC.
THE POSESSOR AGREES TO THE FOLLOWING:
I TO MAINTAIN THIS DOCUMENT IN CONFIDENCE
II NOT TO REPRODUCE OR COPY IT
III NOT TO REVEAL OR PUBLISH IT IN WHOLE OR PART
IV ALL RIGHTS RESERVED

PMU (1 OF 2)

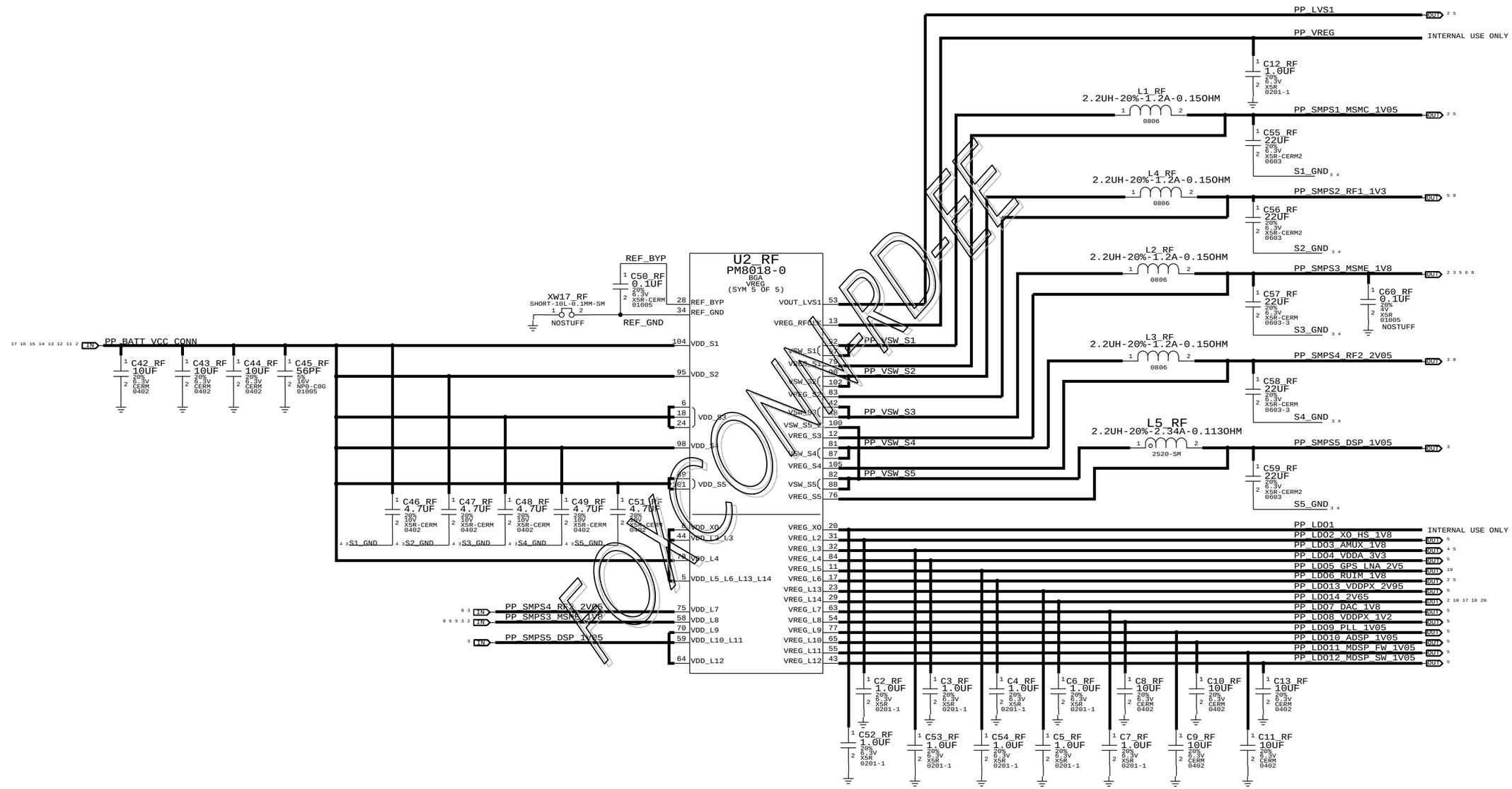

CONFIDENTIAL AND PROPRIETARY APPLE SYSTEM DESIGN. FOR REFERENCE PURPOSE ONLY - NOT A CHANGE REQUEST

PAGE TITLE
CELLULAR PMU: (1 OF 2)

Apple Inc.

DRAWING NUMBER 051-9478 SIZE D

REVISION 8.0.0

BRANCH

PAGE 3 OF 23

SHEET 36 OF 56

NOTICE OF PROPRIETARY PROPERTY:
THE INFORMATION CONTAINED HEREIN IS THE PROPRIETARY PROPERTY OF APPLE INC.
THE POSESSOR AGREES TO THE FOLLOWING:
I TO MAINTAIN THIS DOCUMENT IN CONFIDENCE
II NOT TO REPRODUCE OR COPY IT
III NOT TO REVEAL OR PUBLISH IT IN WHOLE OR PART
IV ALL RIGHTS RESERVED

PMU (2 OF 2)

BOARD_ID	REVISION
0.1V	UNUSED
0.3V	UNUSED
0.5V	UNUSED
0.7V	PROTO1
0.9V	PROTO2
1.1V	EVT1
1.3V	E1C
1.5V	EVT2
1.7V	DVT/PVT

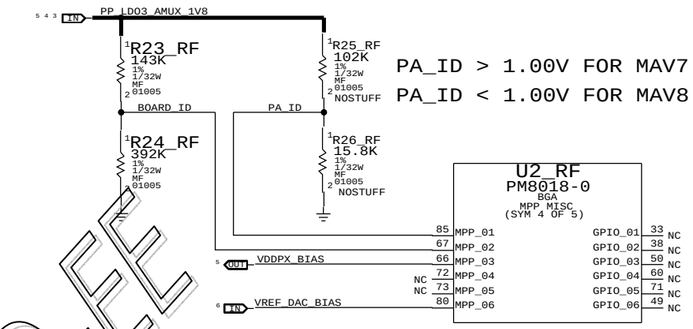

PA_ID > 1.00V FOR MAV7
PA_ID < 1.00V FOR MAV8

PA THERMISTOR REMOVED TO MATCH N41, AP SECTION NEEDS ITS OWN THERMISTOR PLACED NEAR THE PA'S.

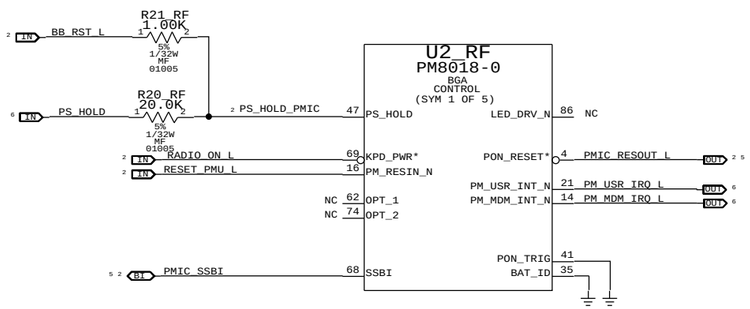

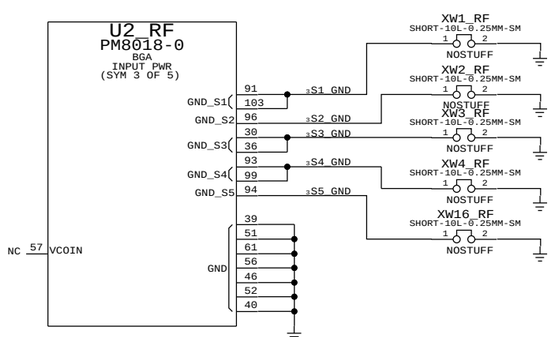

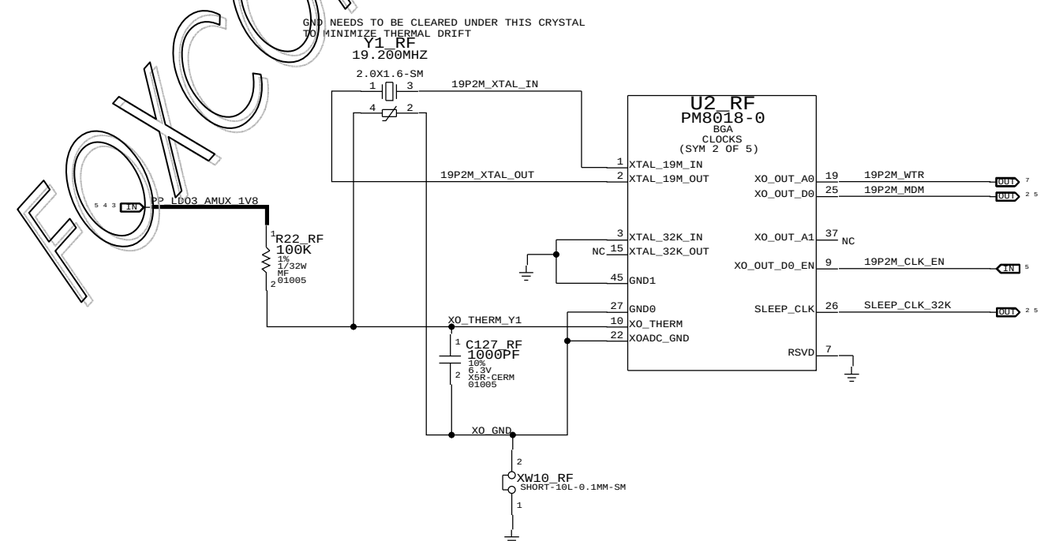

FoxconN-RD-EE

CONFIDENTIAL AND PROPRIETARY APPLE SYSTEM DESIGN. FOR REFERENCE PURPOSE ONLY - NOT A CHANGE REQUEST

PAGE TITLE: CELLULAR PMU: (2 OF 2)

Apple Inc.

DRAWING NUMBER: 051-9478 SIZE: D

REVISION: 8.0.0

BRANCH:

PAGE: 4 OF 23

SHEET: 37 OF 56

NOTICE OF PROPRIETARY PROPERTY:
THE INFORMATION CONTAINED HEREIN IS THE PROPRIETARY PROPERTY OF APPLE INC.
THE POSESSOR AGREES TO THE FOLLOWING:
I TO MAINTAIN THIS DOCUMENT IN CONFIDENCE
II NOT TO REPRODUCE OR COPY IT
III NOT TO REVEAL OR PUBLISH IT IN WHOLE OR PART
IV ALL RIGHTS RESERVED

BASEBAND (1 OF 2)

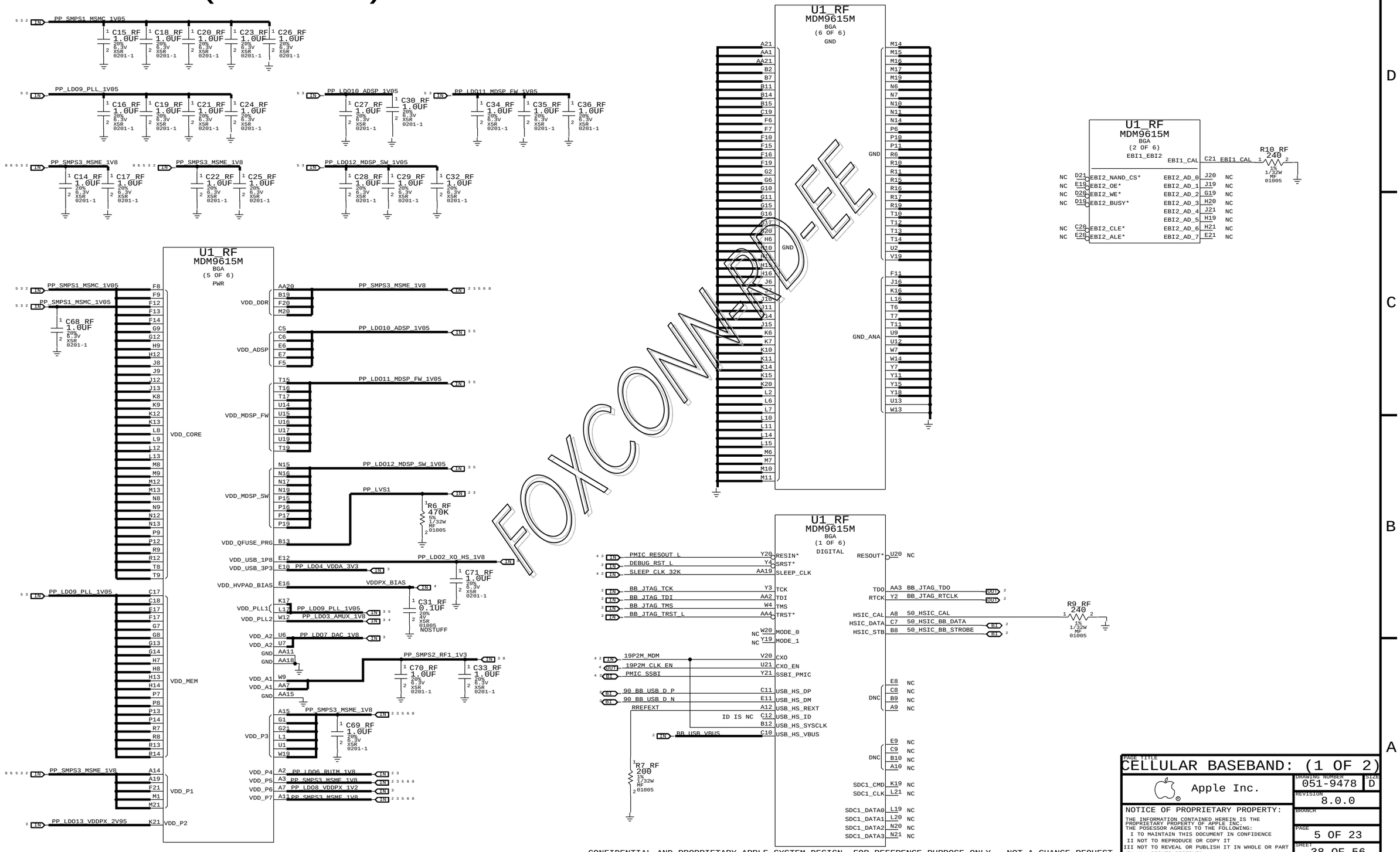

FoxconnD-EE

PAGE TITLE
CELLULAR BASEBAND: (1 OF 2)

Apple Inc.

DRAWING NUMBER 051-9478 SIZE D
REVISION 8.0.0
BRANCH
PAGE 5 OF 23
SHEET 38 OF 56

NOTICE OF PROPRIETARY PROPERTY:
THE INFORMATION CONTAINED HEREIN IS THE PROPRIETARY PROPERTY OF APPLE INC.
THE POSESSOR AGREES TO THE FOLLOWING:
I TO MAINTAIN THIS DOCUMENT IN CONFIDENCE
II NOT TO REPRODUCE OR COPY IT
III NOT TO REVEAL OR PUBLISH IT IN WHOLE OR PART
IV ALL RIGHTS RESERVED

CONFIDENTIAL AND PROPRIETARY APPLE SYSTEM DESIGN. FOR REFERENCE PURPOSE ONLY - NOT A CHANGE REQUEST

BASEBAND (2 OF 2)

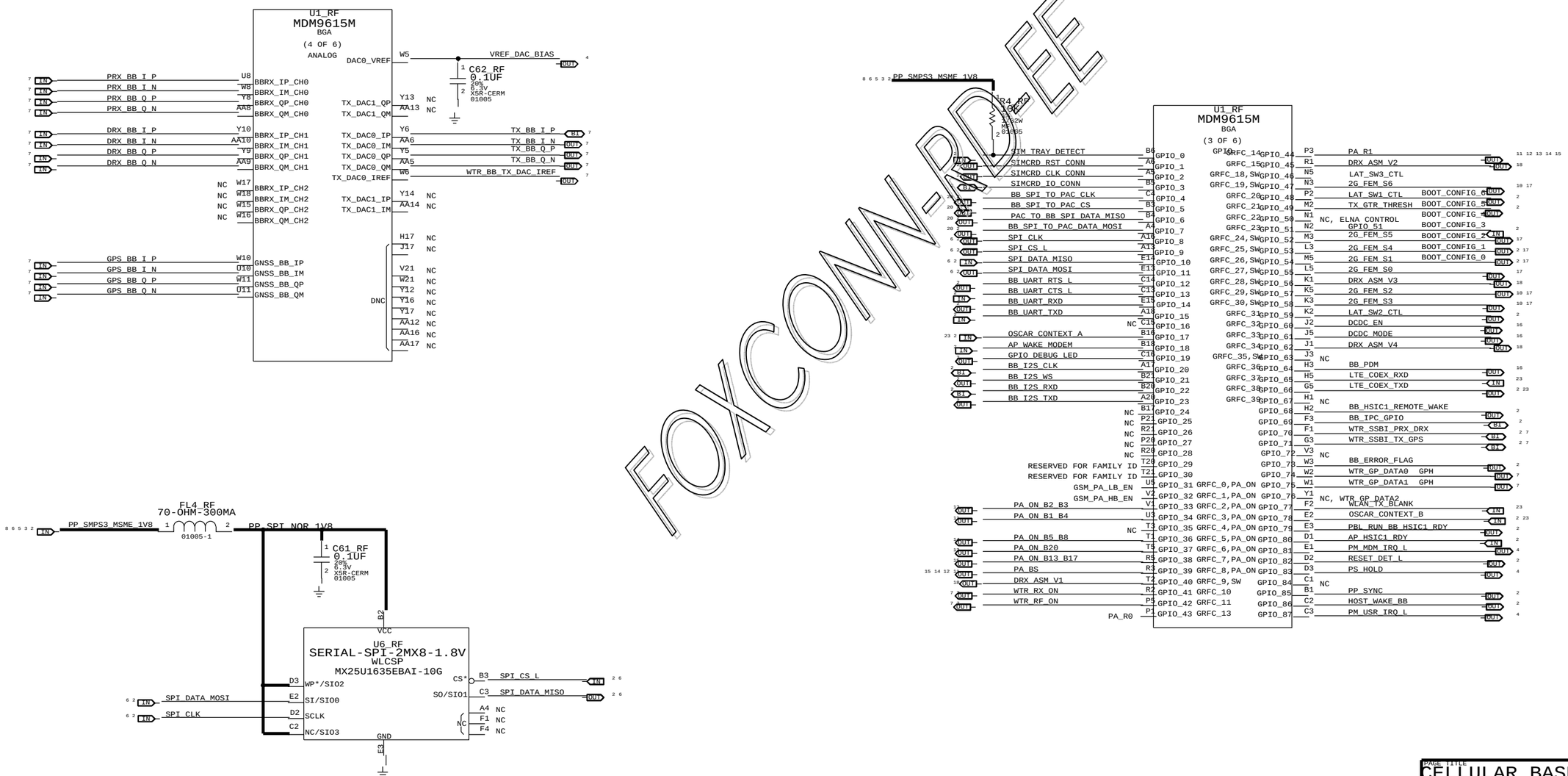

FoxconnPDEE

PAGE TITLE	CELLULAR BASEBAND: (2 OF 2)
Apple Inc.	DRAWING NUMBER 051-9478 SIZE D
	REVISION 8.0.0
NOTICE OF PROPRIETARY PROPERTY: THE INFORMATION CONTAINED HEREIN IS THE PROPRIETARY PROPERTY OF APPLE INC. THE POSESSOR AGREES TO THE FOLLOWING: I TO MAINTAIN THIS DOCUMENT IN CONFIDENCE II NOT TO REPRODUCE OR COPY IT III NOT TO REVEAL OR PUBLISH IT IN WHOLE OR PART IV ALL RIGHTS RESERVED	BRANCH
	PAGE 6 OF 23
	SHEET 39 OF 56

CONFIDENTIAL AND PROPRIETARY APPLE SYSTEM DESIGN. FOR REFERENCE PURPOSE ONLY - NOT A CHANGE REQUEST

RF TRANSCEIVER (1 OF 4)

PRX TRANSCEIVER RF AND IQ PORTS

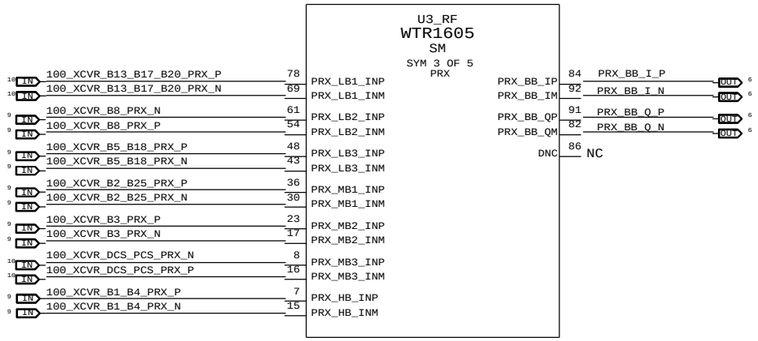

DRX TRANSCEIVER RF AND IQ PORTS

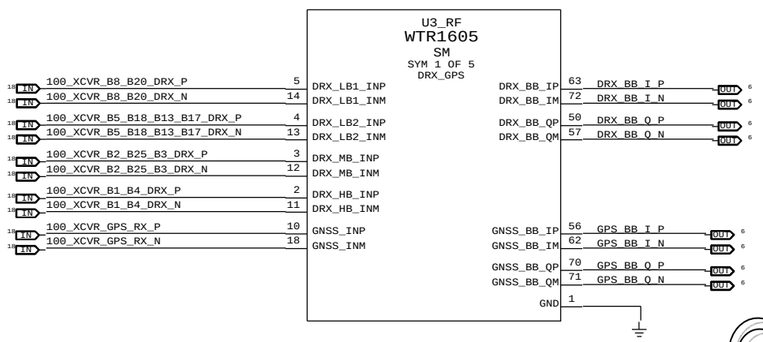

TRANSCEIVER GROUND CONNECTIONS

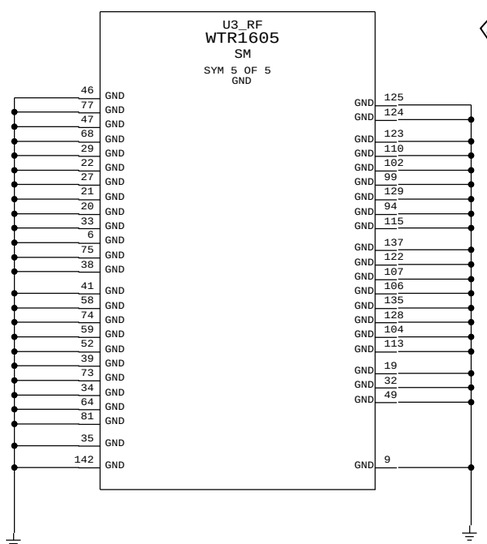

TRANSCEIVER PHASE CONTROL, TX RF & IQ PORTS

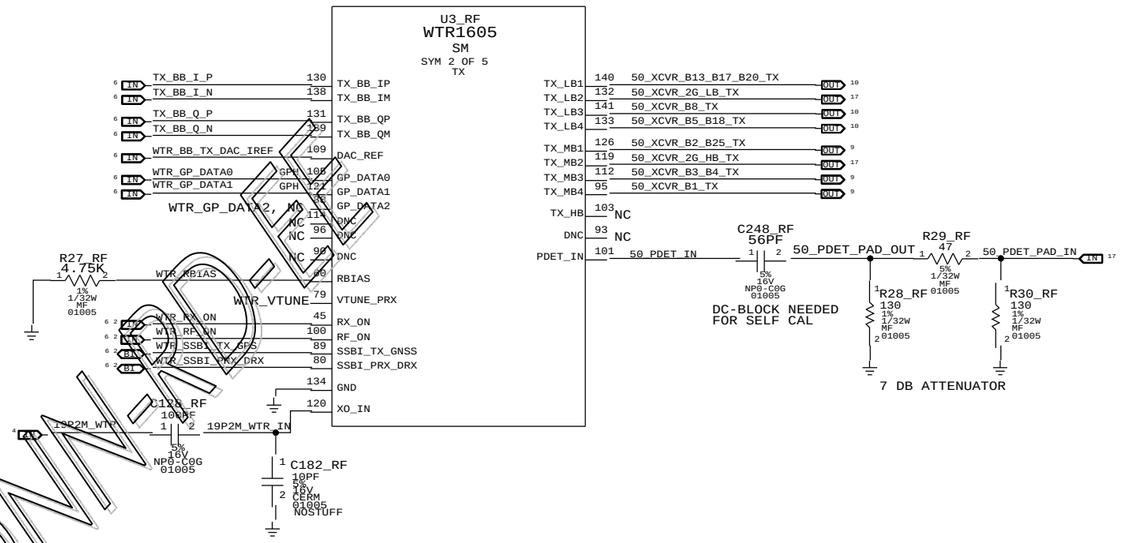

FoxconnE.com

CELLULAR RF TRANSCEIVER: (1 OF 2)

Apple Inc.

DRAWING NUMBER 051-9478 SIZE D
REVISION 8.0.0
BRANCH
PAGE 7 OF 23
SHEET 40 OF 56

NOTICE OF PROPRIETARY PROPERTY:
THE INFORMATION CONTAINED HEREIN IS THE PROPRIETARY PROPERTY OF APPLE INC.
THE POSESSOR AGREES TO THE FOLLOWING:
I TO MAINTAIN THIS DOCUMENT IN CONFIDENCE
II NOT TO REPRODUCE OR COPY IT
III NOT TO REVEAL OR PUBLISH IT IN WHOLE OR PART
IV ALL RIGHTS RESERVED

CONFIDENTIAL AND PROPRIETARY APPLE SYSTEM DESIGN. FOR REFERENCE PURPOSE ONLY - NOT A CHANGE REQUEST

RF TRANSCEIVER (2 OF 2)

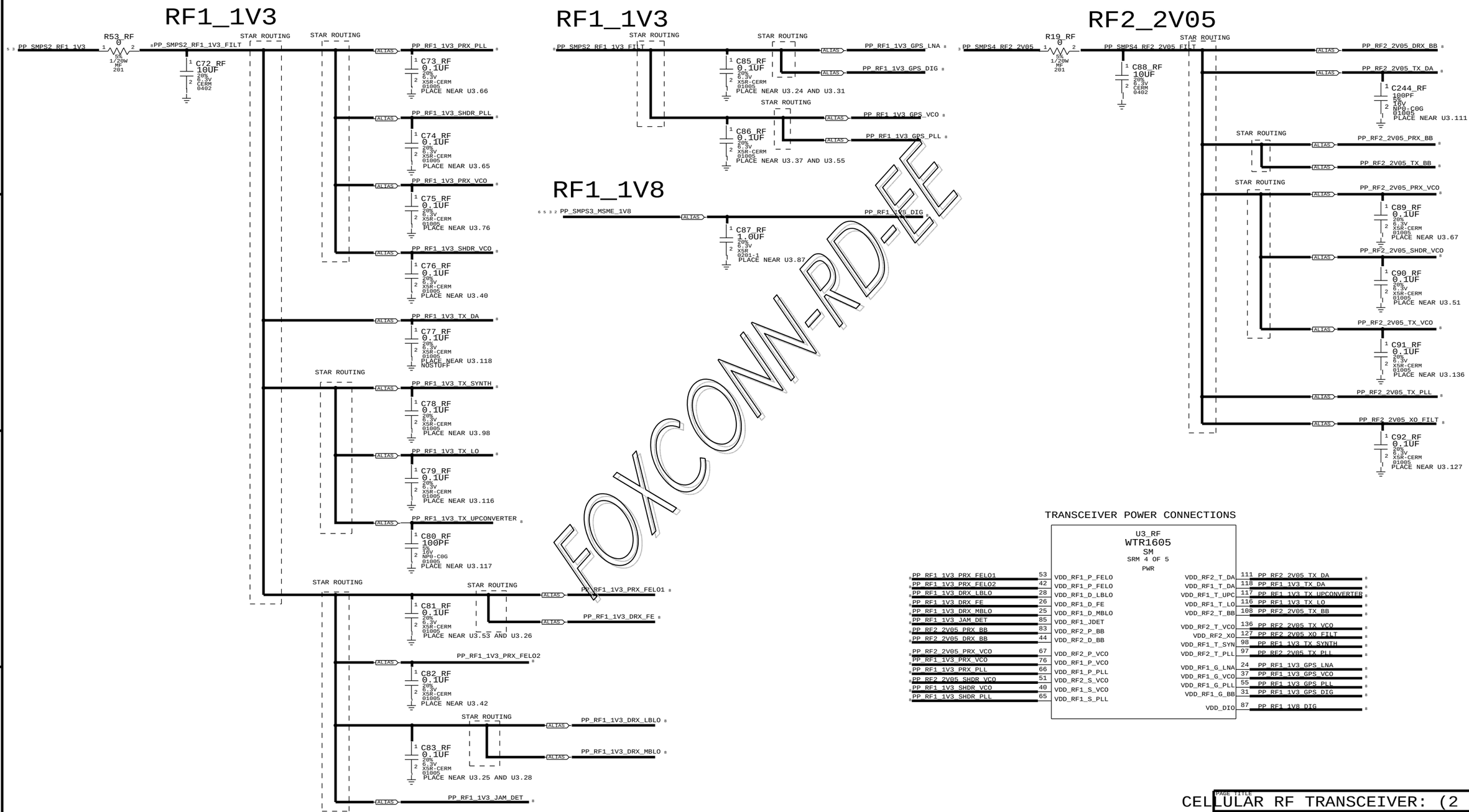

FOXCONN-RD-EE

PAGE TITLE
CELLULAR RF TRANSCEIVER: (2 OF 2)

Apple Inc.

DRAWING NUMBER 051-9478 SIZE D
REVISION 8.0.0
BRANCH
PAGE 8 OF 23
SHEET 41 OF 56

NOTICE OF PROPRIETARY PROPERTY:
THE INFORMATION CONTAINED HEREIN IS THE PROPRIETARY PROPERTY OF APPLE INC.
THE POSESSOR AGREES TO THE FOLLOWING:
I TO MAINTAIN THIS DOCUMENT IN CONFIDENCE
II NOT TO REPRODUCE OR COPY IT
III NOT TO REVEAL OR PUBLISH IT IN WHOLE OR PART
IV ALL RIGHTS RESERVED

CONFIDENTIAL AND PROPRIETARY APPLE SYSTEM DESIGN. FOR REFERENCE PURPOSE ONLY - NOT A CHANGE REQUEST

TRANSCEIVER TX AND RX MATCHING

TX MATCHING NETWORKS

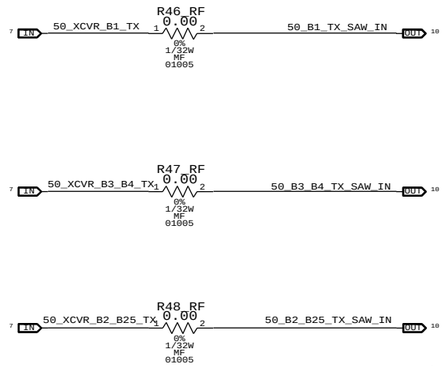

RX MATCHING NETWORKS

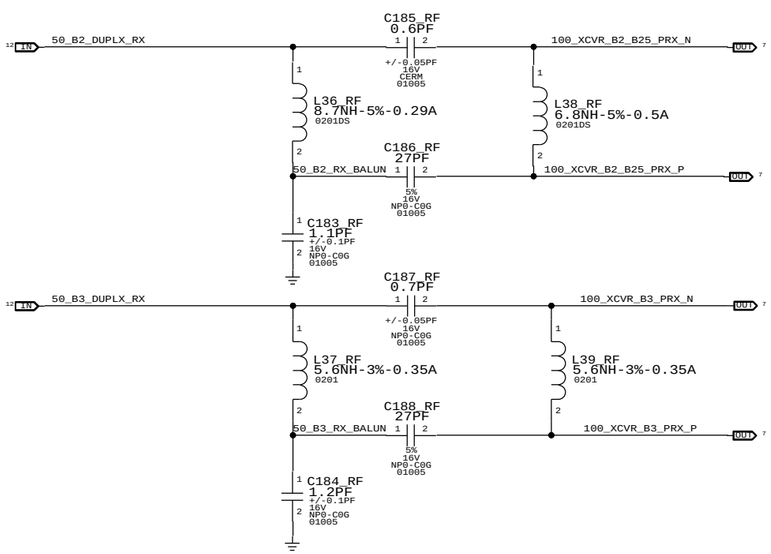

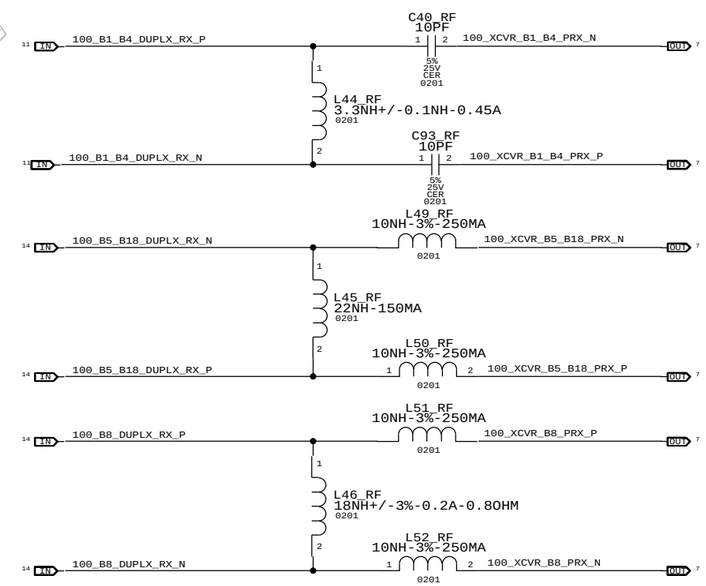

FOXCONN-RD-EE

CONFIDENTIAL AND PROPRIETARY APPLE SYSTEM DESIGN. FOR REFERENCE PURPOSE ONLY - NOT A CHANGE REQUEST

PAGE TITLE
CELLULAR FRONT END: TX AND RX MATCHING

Apple Inc.

DRAWING NUMBER 051-9478 SIZE D
REVISION 8.0.0
BRANCH
PAGE 9 OF 23
SHEET 42 OF 56

NOTICE OF PROPRIETARY PROPERTY:
THE INFORMATION CONTAINED HEREIN IS THE PROPRIETARY PROPERTY OF APPLE INC.
THE POSESSOR AGREES TO THE FOLLOWING:
I TO MAINTAIN THIS DOCUMENT IN CONFIDENCE
II NOT TO REPRODUCE OR COPY IT
III NOT TO REVEAL OR PUBLISH IT IN WHOLE OR PART
IV ALL RIGHTS RESERVED

SAW BANKS

HB TX SAW BANK + B13/B17/B20 DP6T SWITCH AND MATCHING

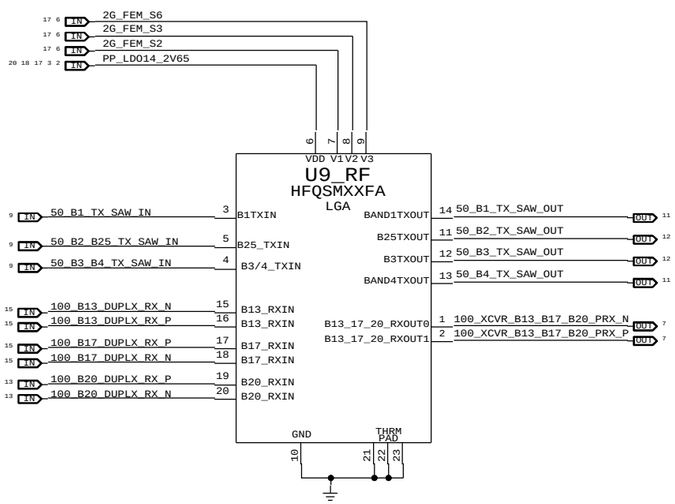

BAND	S6	S3	S2
B3 TX	HIGH	X	X
B4 TX	LOW	X	X
B13 RX	X	HIGH	HIGH
B17 RX	X	HIGH	LOW
B20 RX	X	LOW	HIGH

LB TX SAW BANK

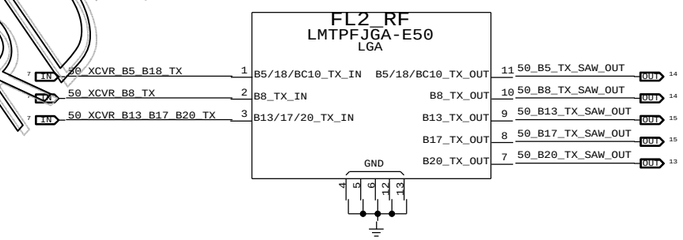

DCS/PCS 2-IN-1 RX FILTER

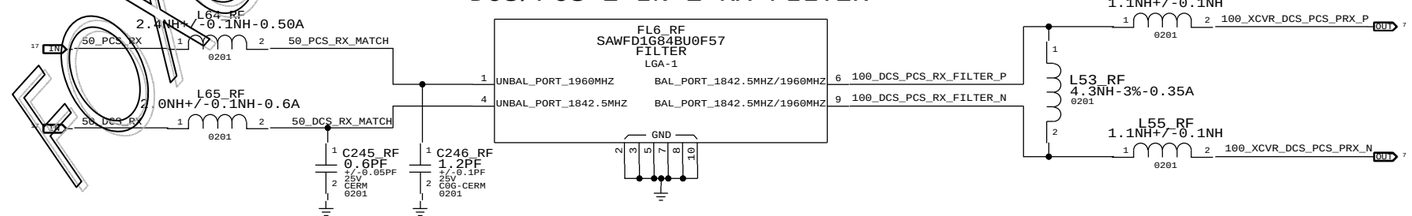

foxconn-RD-EE

CONFIDENTIAL AND PROPRIETARY APPLE SYSTEM DESIGN. FOR REFERENCE PURPOSE ONLY - NOT A CHANGE REQUEST

PAGE TITLE: CELLULAR FRONT END: SAW BANKS

Apple Inc.

DRAWING NUMBER: 051-9478 SIZE: D

REVISION: 8.0.0

BRANCH:

PAGE: 10 OF 23

SHEET: 43 OF 56

NOTICE OF PROPRIETARY PROPERTY:
THE INFORMATION CONTAINED HEREIN IS THE PROPRIETARY PROPERTY OF APPLE INC.
THE POSESSOR AGREES TO THE FOLLOWING:
I TO MAINTAIN THIS DOCUMENT IN CONFIDENCE
II NOT TO REPRODUCE OR COPY IT
III NOT TO REVEAL OR PUBLISH IT IN WHOLE OR PART
IV ALL RIGHTS RESERVED

BAND 1/4 PAT

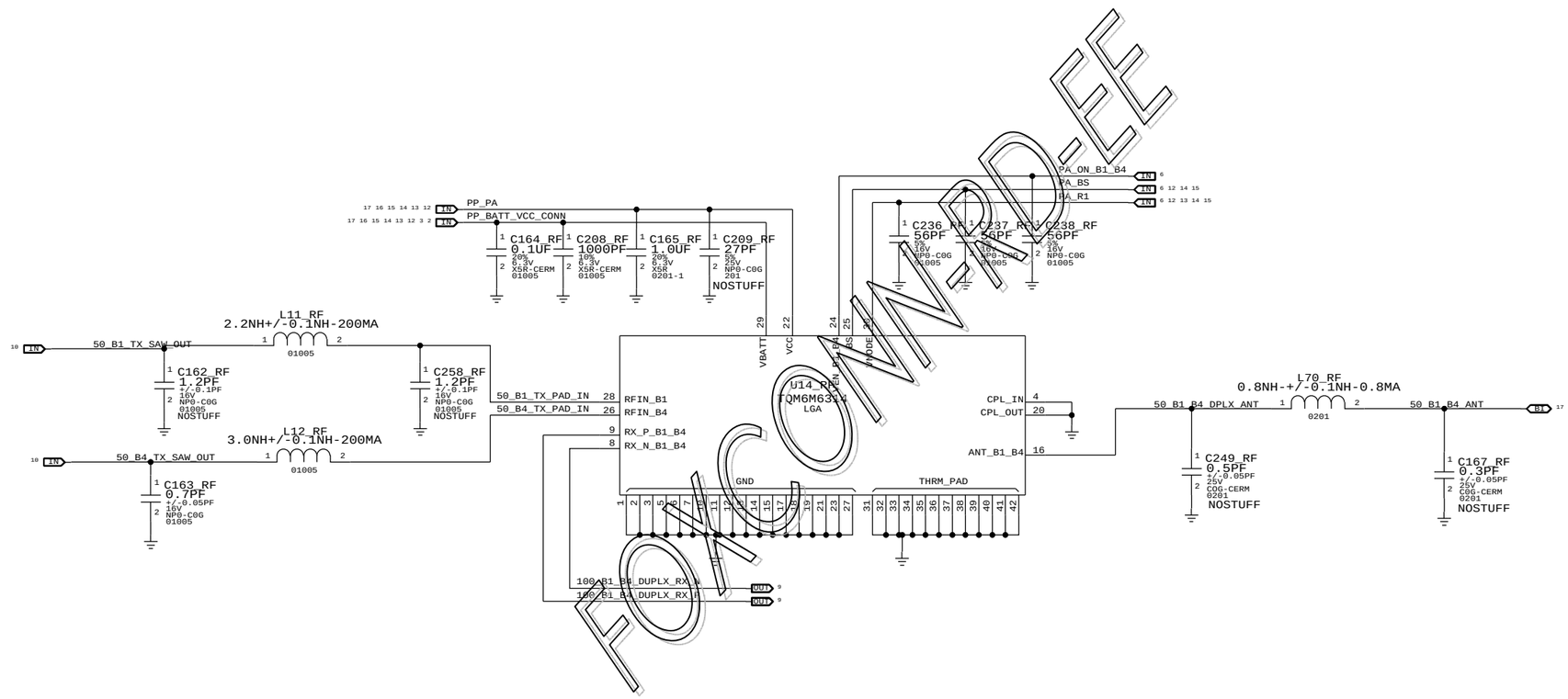

BAND	PA POWER MODE	PA_BS	PA_ON_B1_B4	PA_R1
POWER DOWN	X	0	0	0
STANDBY	X	X	0	X
B4	HPM	0	1	0
B4	LPM	0	1	1
B1	HPM	1	1	0
B1	LPM	1	1	1

CONFIDENTIAL AND PROPRIETARY APPLE SYSTEM DESIGN. FOR REFERENCE PURPOSE ONLY - NOT A CHANGE REQUEST

PAGE TITLE: CELLULAR FRONT END: BAND 1/4 PAT

Apple Inc.

DRAWING NUMBER: 051-9478 SIZE: D

REVISION: 8.0.0

BRANCH:

PAGE: 11 OF 23

SHEET: 44 OF 56

NOTICE OF PROPRIETARY PROPERTY:
THE INFORMATION CONTAINED HEREIN IS THE PROPRIETARY PROPERTY OF APPLE INC.
THE POSESSOR AGREES TO THE FOLLOWING:
I TO MAINTAIN THIS DOCUMENT IN CONFIDENCE
II NOT TO REPRODUCE OR COPY IT
III NOT TO REVEAL OR PUBLISH IT IN WHOLE OR PART
IV ALL RIGHTS RESERVED

BAND 2/3 PAD

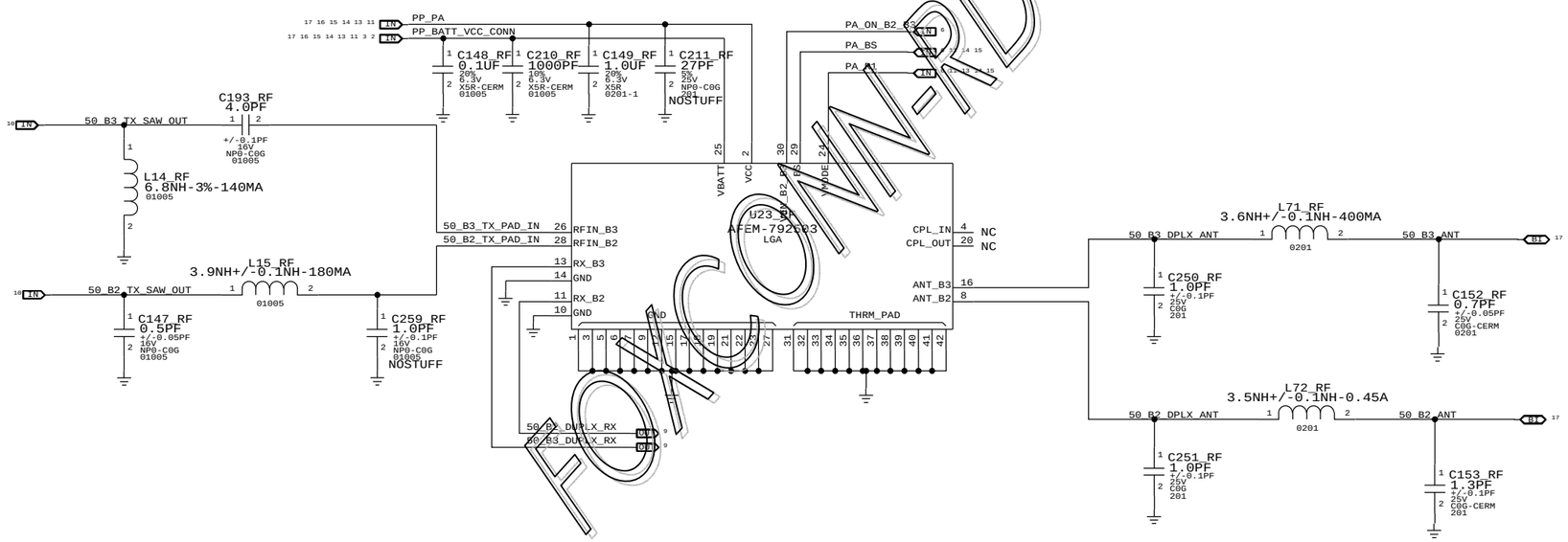

BAND	PA POWER MODE	PA_BS	PA_ON_B2_B3	PA_R1
POWER DOWN	X	0	0	0
STANDBY	X	X	0	X
B3	HPM	0	1	0
B3	LPM	0	1	1
B2	HPM	1	1	0
B2	LPM	1	1	1

CONFIDENTIAL AND PROPRIETARY APPLE SYSTEM DESIGN. FOR REFERENCE PURPOSE ONLY - NOT A CHANGE REQUEST

PAGE TITLE: CELLULAR FRONT END: BAND 2/3 PAD

Apple Inc.

DRAWING NUMBER: 051-9478 SIZE: D

REVISION: 8.0.0

BRANCH

PAGE: 12 OF 23

SHEET: 45 OF 56

NOTICE OF PROPRIETARY PROPERTY:
THE INFORMATION CONTAINED HEREIN IS THE PROPRIETARY PROPERTY OF APPLE INC.
THE POSESSOR AGREES TO THE FOLLOWING:
I TO MAINTAIN THIS DOCUMENT IN CONFIDENCE
II NOT TO REPRODUCE OR COPY IT
III NOT TO REVEAL OR PUBLISH IT IN WHOLE OR PART
IV ALL RIGHTS RESERVED

BAND 20 PAD

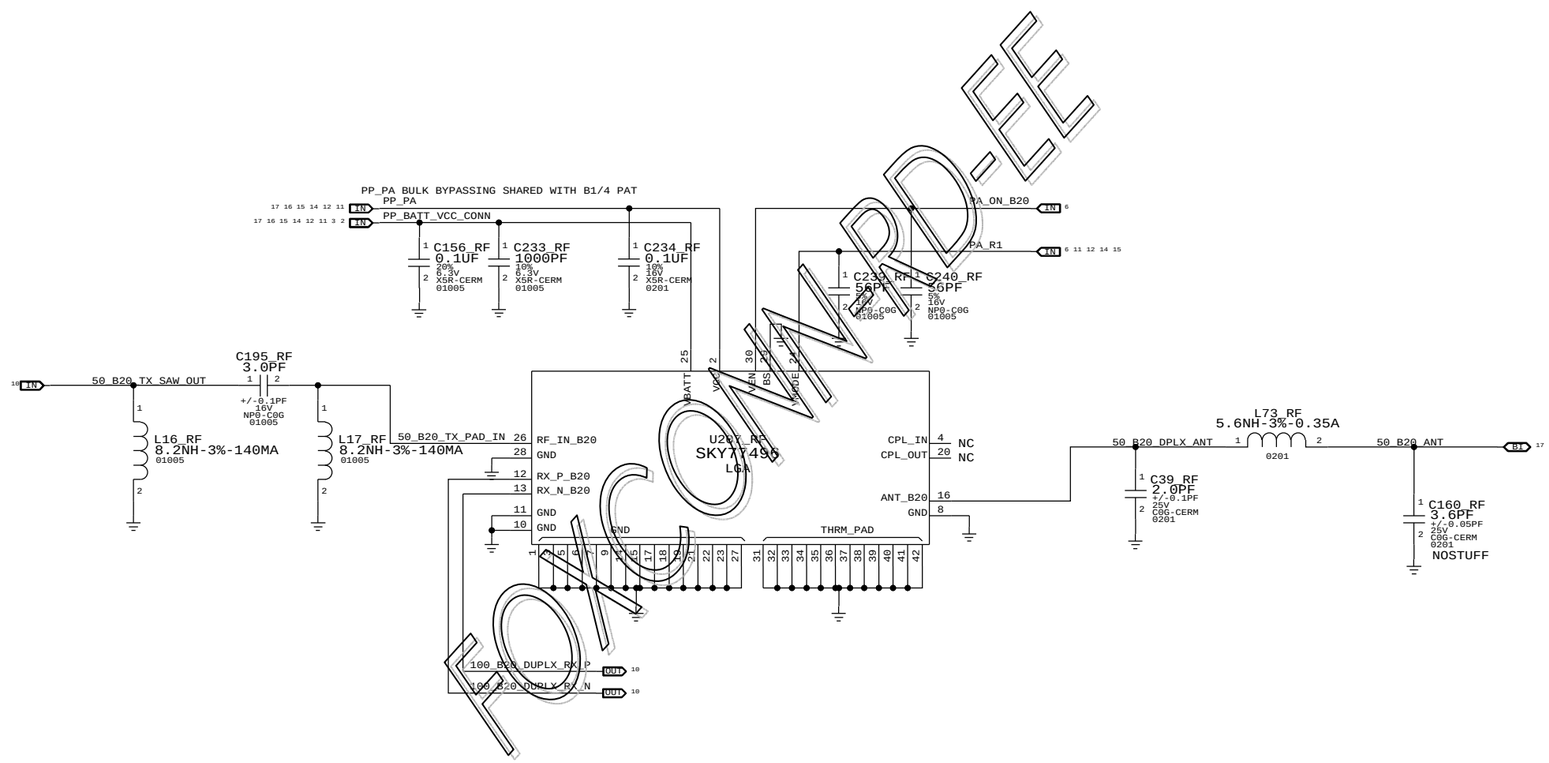

BAND	PA POWER MODE	PA_ON_B20	PA_R1
POWER DOWN	LPM	0	0
STANDBY	X	0	X
B20	HPM	1	0
B20	LPM	1	1

CONFIDENTIAL AND PROPRIETARY APPLE SYSTEM DESIGN. FOR REFERENCE PURPOSE ONLY - NOT A CHANGE REQUEST

PAGE TITLE: CELLULAR FRONT END: BAND 20 PAD

Apple Inc.

DRAWING NUMBER: 051-9478 SIZE: D

REVISION: 8.0.0

BRANCH:

PAGE: 13 OF 23

SHEET: 46 OF 56

NOTICE OF PROPRIETARY PROPERTY:
THE INFORMATION CONTAINED HEREIN IS THE PROPRIETARY PROPERTY OF APPLE INC.
THE POSESSOR AGREES TO THE FOLLOWING:
I TO MAINTAIN THIS DOCUMENT IN CONFIDENCE
II NOT TO REPRODUCE OR COPY IT
III NOT TO REVEAL OR PUBLISH IT IN WHOLE OR PART
IV ALL RIGHTS RESERVED

BAND 5/8 PAD

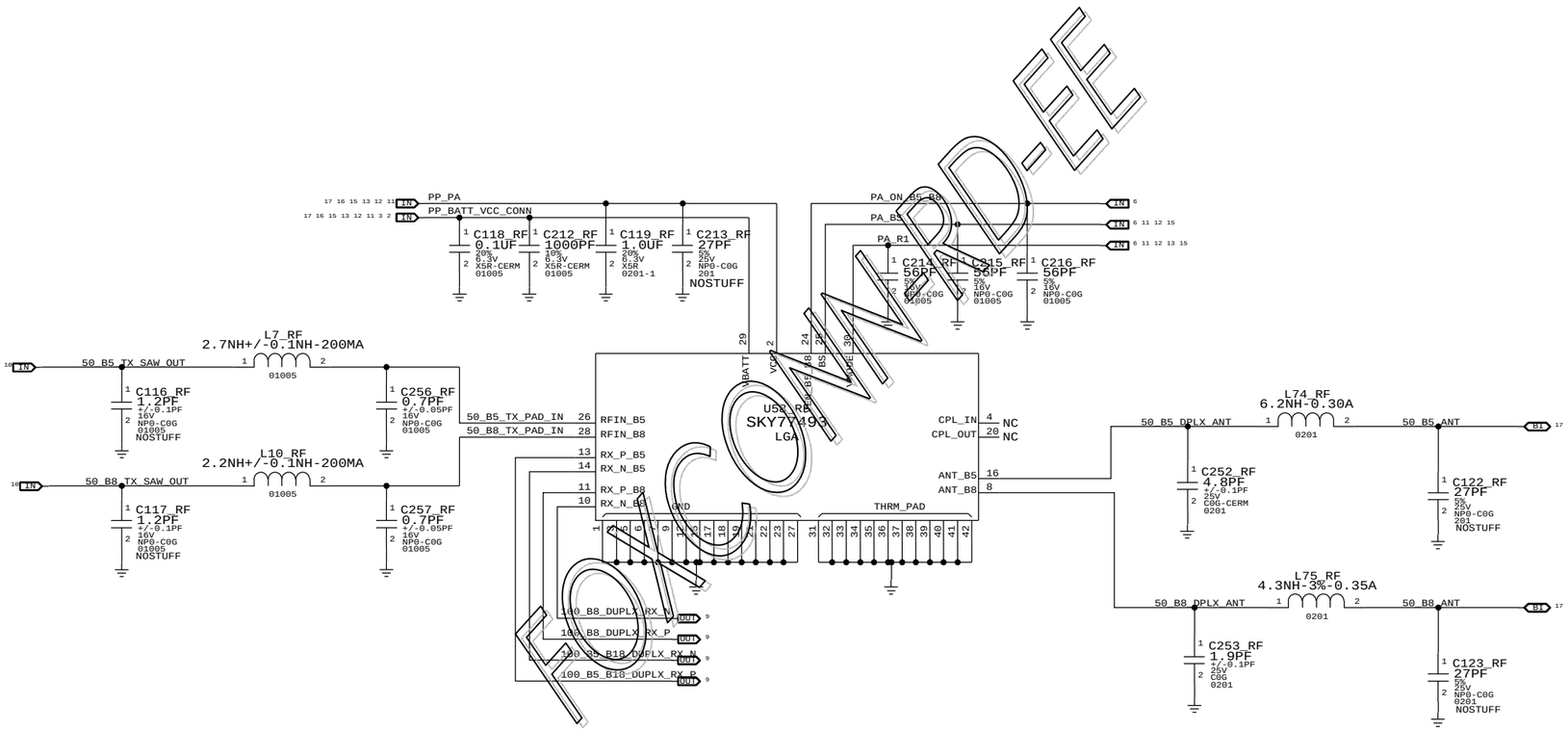

BAND	PA POWER MODE	PA_BS	PA_ON_B5_B8	PA_R1
POWER DOWN	X	0	0	0
STANDBY	X	X	0	X
B5	HPM	0	1	0
B5	LPM	0	1	1
B8	HPM	1	1	0
B8	LPM	1	1	1

CONFIDENTIAL AND PROPRIETARY APPLE SYSTEM DESIGN. FOR REFERENCE PURPOSE ONLY - NOT A CHANGE REQUEST

PAGE TITLE: CELLULAR FRONT END: BAND 5/8 PAD

Apple Inc.

DRAWING NUMBER: 051-9478 SIZE: D

REVISION: 8.0.0

BRANCH:

NOTICE OF PROPRIETARY PROPERTY:
THE INFORMATION CONTAINED HEREIN IS THE PROPRIETARY PROPERTY OF APPLE INC.
THE POSESSOR AGREES TO THE FOLLOWING:
I TO MAINTAIN THIS DOCUMENT IN CONFIDENCE
II NOT TO REPRODUCE OR COPY IT
III NOT TO REVEAL OR PUBLISH IT IN WHOLE OR PART
IV ALL RIGHTS RESERVED

BAND 13/17 PAD

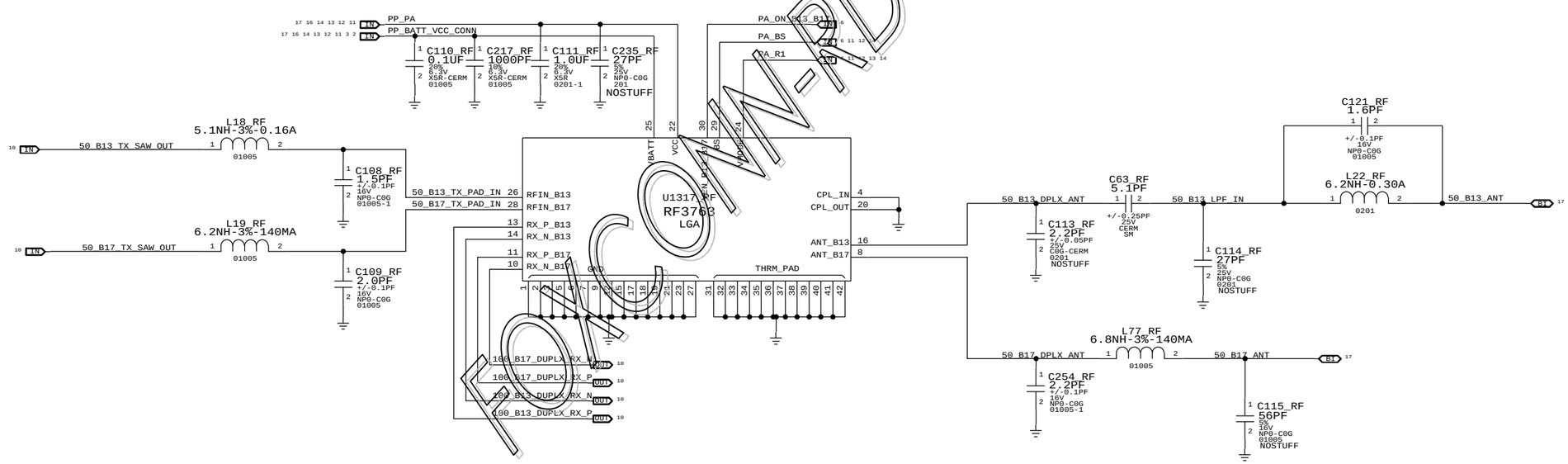

BAND	PA POWER MODE	PA_BS	PA_ON_B13_B17	PA_R1
POWER DOWN	X	0	0	0
STANDBY	X	X	0	X
B17	HPM	0	1	0
B17	LPM	0	1	1
B13	HPM	1	1	0
B13	LPM	1	1	1

CONFIDENTIAL AND PROPRIETARY APPLE SYSTEM DESIGN. FOR REFERENCE PURPOSE ONLY - NOT A CHANGE REQUEST

PAGE TITLE: CELLULAR FRONT END: BAND 13/17 PAD

Apple Inc.

DRAWING NUMBER: 051-9478 SIZE: D

REVISION: 8.0.0

BRANCH:

PAGE: 15 OF 23

SHEET: 48 OF 56

NOTICE OF PROPRIETARY PROPERTY:
THE INFORMATION CONTAINED HEREIN IS THE PROPRIETARY PROPERTY OF APPLE INC.
THE POSESSOR AGREES TO THE FOLLOWING:
I TO MAINTAIN THIS DOCUMENT IN CONFIDENCE
II NOT TO REPRODUCE OR COPY IT
III NOT TO REVEAL OR PUBLISH IT IN WHOLE OR PART
IV ALL RIGHTS RESERVED

PA DC/DC CONVERTER

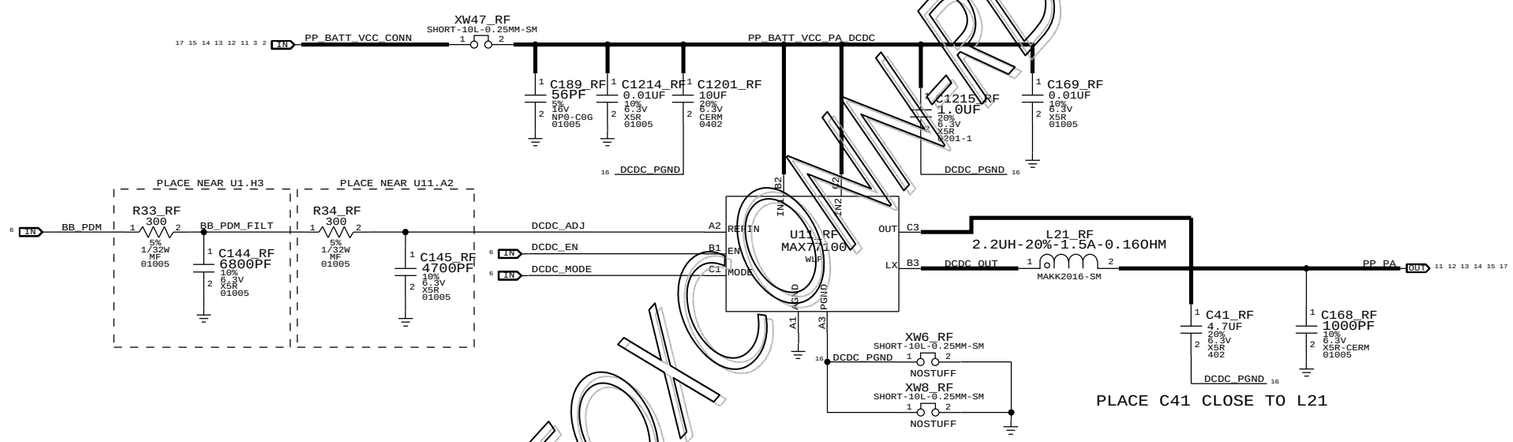

FOXCONN-RD-EE

CELLULAR FRONT END: PA DCDC CONVERTER

Apple Inc.

DRAWING NUMBER 051-9478 SIZE D

REVISION 8.0.0

BRANCH

PAGE 16 OF 23

SHEET 49 OF 56

NOTICE OF PROPRIETARY PROPERTY:
THE INFORMATION CONTAINED HEREIN IS THE PROPRIETARY PROPERTY OF APPLE INC.
THE POSESSOR AGREES TO THE FOLLOWING:
I TO MAINTAIN THIS DOCUMENT IN CONFIDENCE
II NOT TO REPRODUCE OR COPY IT
III NOT TO REVEAL OR PUBLISH IT IN WHOLE OR PART
IV ALL RIGHTS RESERVED

CONFIDENTIAL AND PROPRIETARY APPLE SYSTEM DESIGN. FOR REFERENCE PURPOSE ONLY - NOT A CHANGE REQUEST

2G FEM

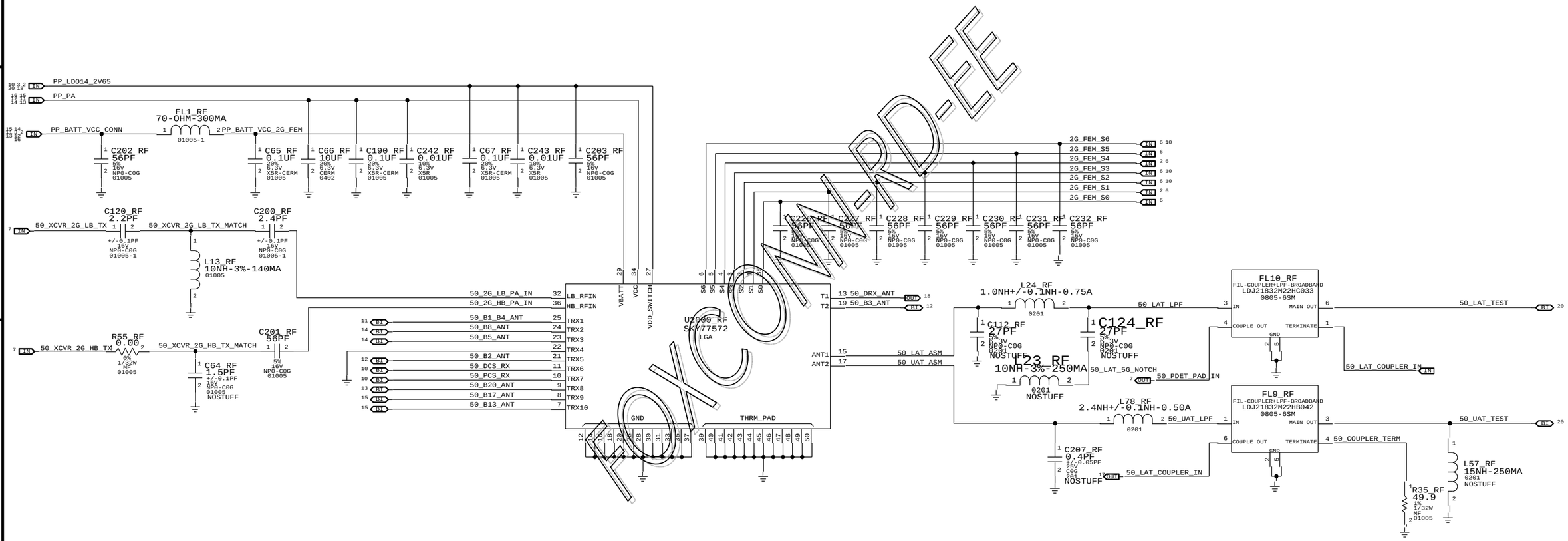

SEE PGS. 21-22 FOR 2G FEM LOGIC TABLE

CONFIDENTIAL AND PROPRIETARY APPLE SYSTEM DESIGN. FOR REFERENCE PURPOSE ONLY - NOT A CHANGE REQUEST

PAGE TITLE
CELLULAR FRONT END: 2G FEM

Apple Inc.

DRAWING NUMBER 051-9478 SIZE D
REVISION 8.0.0
BRANCH
PAGE 17 OF 23
SHEET 50 OF 56

NOTICE OF PROPRIETARY PROPERTY:
THE INFORMATION CONTAINED HEREIN IS THE PROPRIETARY PROPERTY OF APPLE INC.
THE POSESSOR AGREES TO THE FOLLOWING:
I TO MAINTAIN THIS DOCUMENT IN CONFIDENCE
II NOT TO REPRODUCE OR COPY IT
III NOT TO REVEAL OR PUBLISH IT IN WHOLE OR PART
IV ALL RIGHTS RESERVED

RX DIVERSITY

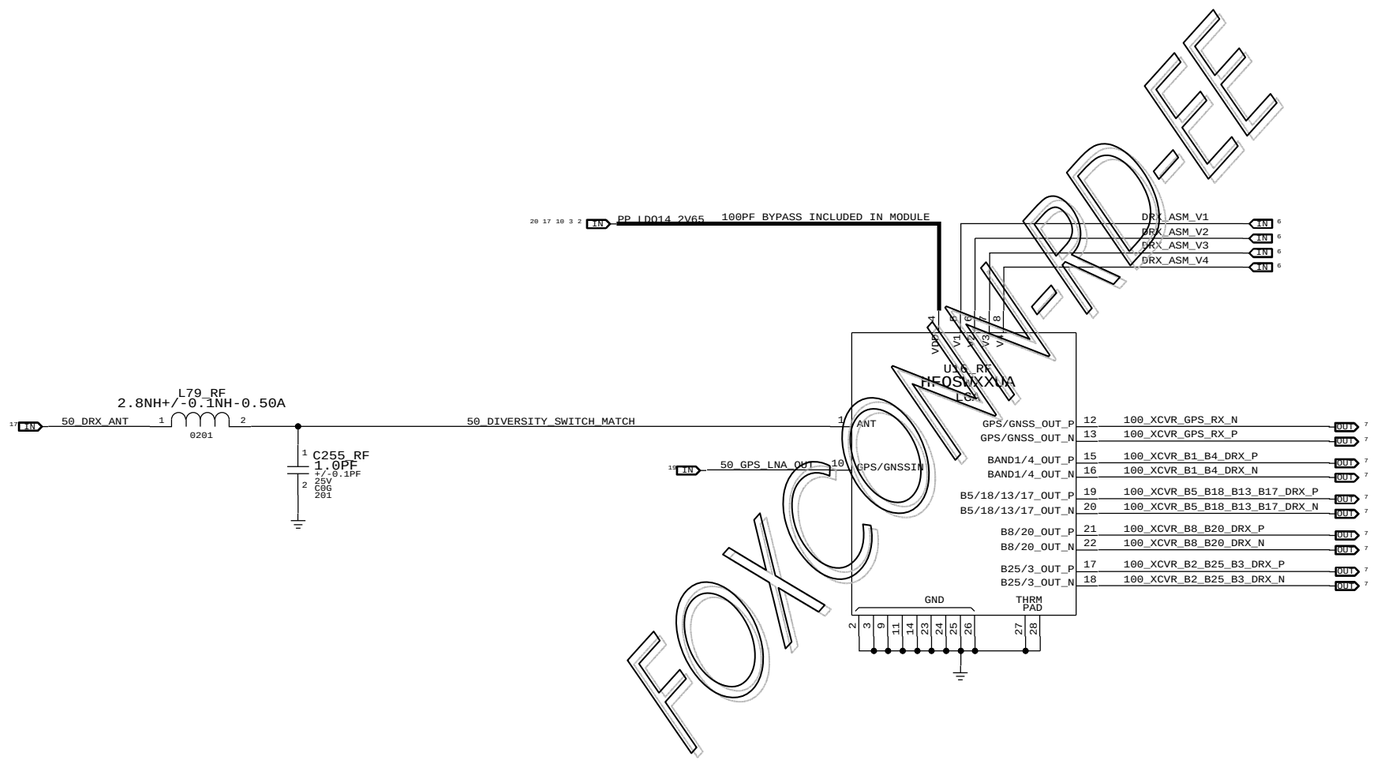

BAND	DRX_ASM_V4	DRX_ASM_V3	DRX_ASM_V2	DRX_ASM_V1
B1/B4	LOW	LOW	LOW	LOW
B2/25	LOW	HIGH	LOW	LOW
B3	HIGH	LOW	LOW	LOW
B5/6/18	LOW	LOW	HIGH	LOW
B8	LOW	LOW	LOW	HIGH
B13/17	LOW	HIGH	HIGH	HIGH
B20	LOW	HIGH	HIGH	LOW
OFF	LOW	LOW	HIGH	HIGH
SWITCH IS TERMINATED IN ALL OTHER POSSIBLE STATES				

FOXCONN-RD-EE

CONFIDENTIAL AND PROPRIETARY APPLE SYSTEM DESIGN. FOR REFERENCE PURPOSE ONLY - NOT A CHANGE REQUEST

PAGE TITLE: CELLULAR FRONT END: RX DIVERSITY

Apple Inc.

DRAWING NUMBER: 051-9478 SIZE: D

REVISION: 8.0.0

BRANCH:

PAGE: 18 OF 23

SHEET: 51 OF 56

NOTICE OF PROPRIETARY PROPERTY:
THE INFORMATION CONTAINED HEREIN IS THE PROPRIETARY PROPERTY OF APPLE INC.
THE POSESSOR AGREES TO THE FOLLOWING:
I TO MAINTAIN THIS DOCUMENT IN CONFIDENCE
II NOT TO REPRODUCE OR COPY IT
III NOT TO REVEAL OR PUBLISH IT IN WHOLE OR PART
IV ALL RIGHTS RESERVED

GPS

GPS FEED

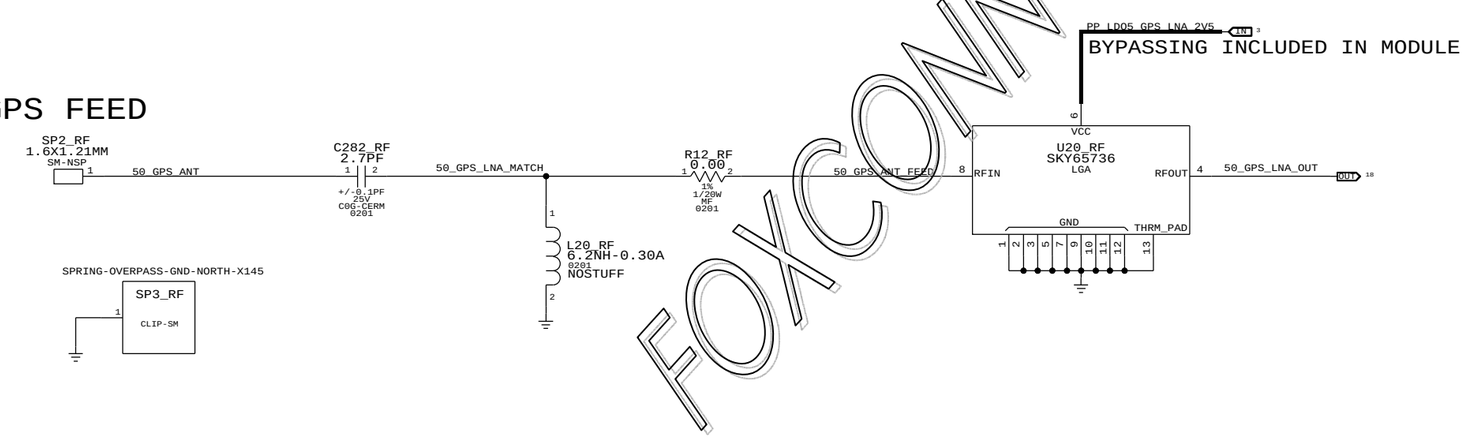

FoxconN-RD-EE

CONFIDENTIAL AND PROPRIETARY APPLE SYSTEM DESIGN. FOR REFERENCE PURPOSE ONLY - NOT A CHANGE REQUEST

PAGE TITLE
CELLULAR FRONT END: GPS LNA

Apple Inc.

DRAWING NUMBER 051-9478 SIZE D

REVISION 8.0.0

BRANCH

PAGE 19 OF 23

SHEET 52 OF 56

NOTICE OF PROPRIETARY PROPERTY:
THE INFORMATION CONTAINED HEREIN IS THE PROPRIETARY PROPERTY OF APPLE INC.
THE POSESSOR AGREES TO THE FOLLOWING:
I TO MAINTAIN THIS DOCUMENT IN CONFIDENCE
II NOT TO REPRODUCE OR COPY IT
III NOT TO REVEAL OR PUBLISH IT IN WHOLE OR PART
IV ALL RIGHTS RESERVED

ANTENNA FEEDS

UAT1 FEED

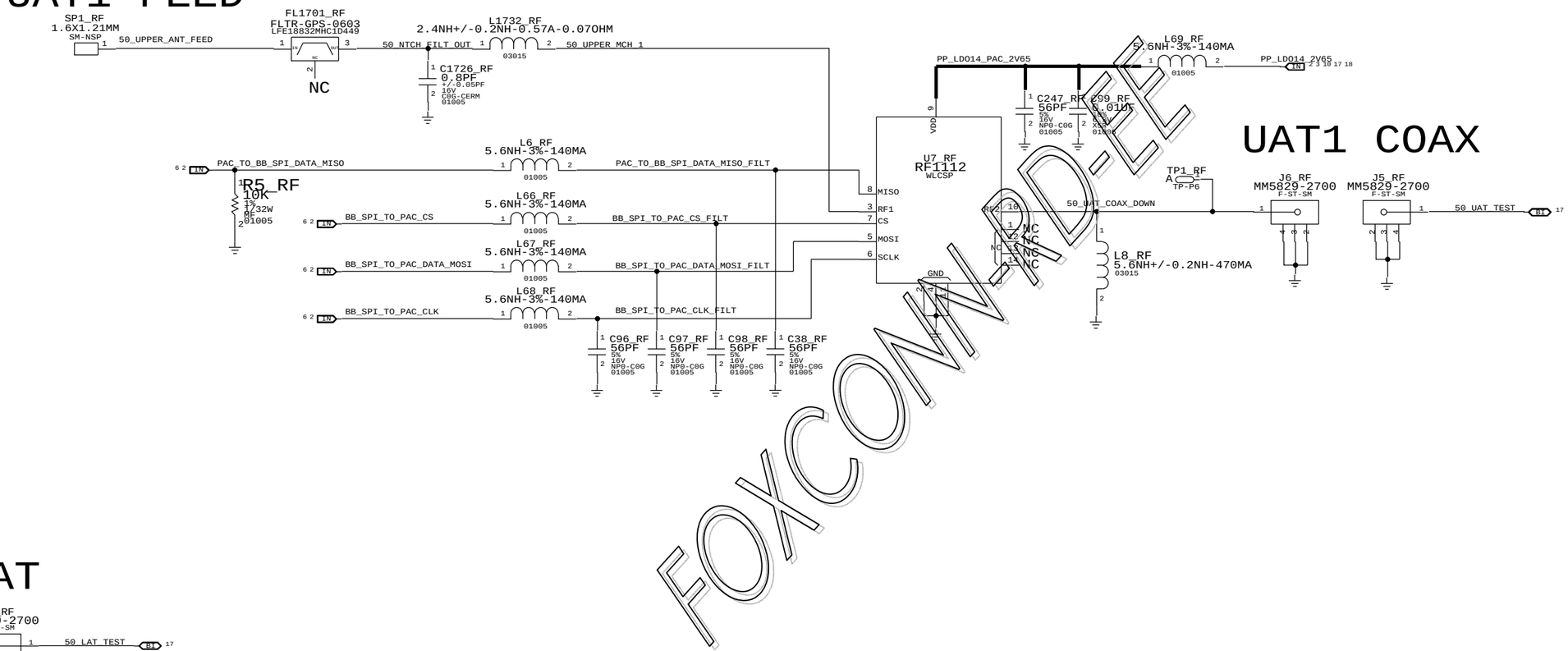

UAT1 COAX

LAT

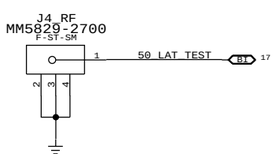

FoxconnDEL

CONFIDENTIAL AND PROPRIETARY APPLE SYSTEM DESIGN. FOR REFERENCE PURPOSE ONLY - NOT A CHANGE REQUEST

PAGE TITLE
CELLULAR FRONT END: ANTENNA FEEDS

Apple Inc.

DRAWING NUMBER 051-9478
SIZE D
REVISION 8.0.0
BRANCH
PAGE 20 OF 23
SHEET 53 OF 56

NOTICE OF PROPRIETARY PROPERTY:
THE INFORMATION CONTAINED HEREIN IS THE PROPRIETARY PROPERTY OF APPLE INC.
THE POSESSOR AGREES TO THE FOLLOWING:
I TO MAINTAIN THIS DOCUMENT IN CONFIDENCE
II NOT TO REPRODUCE OR COPY IT
III NOT TO REVEAL OR PUBLISH IT IN WHOLE OR PART
IV ALL RIGHTS RESERVED

2G FEM LOGIC TABLE (1 OF 2)

BAND	S6	S5	S4	S3	S2	S1	S0	TX/PRX PATH	DRX PATH
LB TX, IDLE, LAT	HIGH	HIGH	HIGH	LOW	LOW	HIGH	HIGH	LAT	UAT
LB TX, IDLE, UAT	HIGH	HIGH	HIGH	LOW	LOW	LOW	HIGH	UAT	LAT
LB TX, LAT, HPM	HIGH	HIGH	HIGH	LOW	HIGH	HIGH	HIGH	LAT	UAT
LB TX, UAT, HPM	HIGH	HIGH	HIGH	LOW	HIGH	LOW	HIGH	UAT	LAT
LB TX, LAT, LPM	HIGH	HIGH	HIGH	LOW	HIGH	HIGH	LOW	LAT	UAT
LB TX, UAT, LPM	HIGH	HIGH	HIGH	LOW	HIGH	LOW	LOW	UAT	LAT
LB TX, HIGH Z, LAT, HPM	HIGH	HIGH	LOW	LOW	HIGH	HIGH	HIGH	LAT	UAT
LB TX, HIGH Z, UAT, HPM	HIGH	HIGH	LOW	LOW	HIGH	LOW	HIGH	UAT	LAT
LB TX, HIGH Z, LAT, LPM	HIGH	HIGH	LOW	LOW	HIGH	HIGH	LOW	LAT	UAT
LB TX, HIGH Z, UAT, LPM	HIGH	HIGH	LOW	LOW	HIGH	LOW	LOW	UAT	LAT
HB TX, IDLE, LAT	HIGH	HIGH	HIGH	HIGH	LOW	HIGH	HIGH	LAT	UAT
HB TX, IDLE, UAT	HIGH	HIGH	HIGH	HIGH	LOW	LOW	HIGH	UAT	LAT
HB TX, LAT, HPM	HIGH	HIGH	HIGH	HIGH	HIGH	HIGH	HIGH	LAT	UAT
HB TX, UAT, HPM	HIGH	HIGH	HIGH	HIGH	HIGH	LOW	HIGH	UAT	LAT
HB TX, LAT, LPM	HIGH	HIGH	HIGH	HIGH	HIGH	HIGH	LOW	LAT	UAT
HB TX, UAT, LPM	HIGH	HIGH	HIGH	HIGH	HIGH	LOW	LOW	UAT	LAT
HB TX, HIGH Z, LAT, HPM	HIGH	HIGH	LOW	HIGH	HIGH	HIGH	HIGH	LAT	UAT
HB TX, HIGH Z, UAT, HPM	HIGH	HIGH	LOW	HIGH	HIGH	LOW	HIGH	UAT	LAT
HB TX, HIGH Z, LAT, LPM	HIGH	HIGH	LOW	HIGH	HIGH	HIGH	LOW	LAT	UAT
HB TX, HIGH Z, UAT, LPM	HIGH	HIGH	LOW	HIGH	HIGH	LOW	LOW	UAT	LAT
GSM850 RX, LAT	HIGH	LOW	HIGH	HIGH	LOW	HIGH	HIGH	LAT	UAT
GSM850 RX, UAT	HIGH	LOW	HIGH	HIGH	LOW	LOW	HIGH	UAT	LAT
GSM900 RX, LAT	HIGH	LOW	HIGH	HIGH	HIGH	HIGH	HIGH	LAT	UAT
GSM900 RX, UAT	HIGH	LOW	HIGH	HIGH	HIGH	LOW	HIGH	UAT	LAT
GSM1900 RX, LAT	LOW	HIGH	LOW	HIGH	HIGH	HIGH	HIGH	LAT	UAT
GSM1900 RX, UAT	LOW	HIGH	LOW	HIGH	HIGH	LOW	HIGH	UAT	LAT
GSM1800 RX, LAT	HIGH	LOW	LOW	HIGH	HIGH	HIGH	HIGH	LAT	UAT
GSM1800 RX, UAT	HIGH	LOW	LOW	HIGH	HIGH	LOW	HIGH	UAT	LAT
TERMINATED, UAT	HIGH	LOW	HIGH	LOW	HIGH	HIGH	HIGH	UAT	LAT
TERMINATED, LAT	HIGH	LOW	HIGH	LOW	HIGH	LOW	HIGH	LAT	UAT

LAT = LOWER ANTENNA
UAT = UPPER ANTENNA

FOR INTERNAL USE ONLY

CONFIDENTIAL AND PROPRIETARY APPLE SYSTEM DESIGN. FOR REFERENCE PURPOSE ONLY - NOT A CHANGE REQUEST

PAGE TITLE
2G FEM LOGIC TABLE (1 OF 2)

Apple Inc.

DRAWING NUMBER 051-9478 SIZE D
REVISION 8.0.0
BRANCH
PAGE 21 OF 23
SHEET 54 OF 56

NOTICE OF PROPRIETARY PROPERTY:
THE INFORMATION CONTAINED HEREIN IS THE PROPRIETARY PROPERTY OF APPLE INC.
THE POSESSOR AGREES TO THE FOLLOWING:
I TO MAINTAIN THIS DOCUMENT IN CONFIDENCE
II NOT TO REPRODUCE OR COPY IT
III NOT TO REVEAL OR PUBLISH IT IN WHOLE OR PART
IV ALL RIGHTS RESERVED

2G FEM LOGIC TABLE - DEV2 (2 OF 2)

BAND	S6	S5	S4	S3	S2	S1	S0	TX/PRX PATH	DRX PATH
B1/BC6, LAT	LOW	LOW	LOW	LOW	HIGH	HIGH	HIGH	LAT	UAT
B1/BC6, UAT	LOW	LOW	LOW	LOW	HIGH	LOW	HIGH	UAT	LAT
B2/B25/BC1, LAT	LOW	HIGH	LOW	LOW	HIGH	HIGH	HIGH	LAT	UAT
B2/B25/BC1, UAT	LOW	HIGH	LOW	LOW	HIGH	LOW	HIGH	UAT	LAT
B3, LAT	HIGH	LOW	LOW	LOW	HIGH	HIGH	HIGH	LAT	UAT
B3, UAT	HIGH	LOW	LOW	LOW	HIGH	LOW	HIGH	UAT	LAT
B4/BC15, LAT	LOW	LOW	LOW	LOW	HIGH	HIGH	HIGH	LAT	UAT
B4/BC15, UAT	LOW	LOW	LOW	LOW	HIGH	LOW	HIGH	UAT	LAT
B5/B6/B18/BC0/BC10, LAT	LOW	LOW	HIGH	LOW	HIGH	HIGH	HIGH	LAT	UAT
B5/B6/B18/BC0/BC10, UAT	LOW	LOW	HIGH	LOW	HIGH	LOW	HIGH	UAT	LAT
B8, LAT	LOW	LOW	LOW	HIGH	HIGH	HIGH	HIGH	LAT	UAT
B8, UAT	LOW	LOW	LOW	HIGH	HIGH	LOW	HIGH	UAT	LAT
B13, LAT	LOW	HIGH	HIGH	HIGH	HIGH	HIGH	HIGH	LAT	UAT
B13, UAT	LOW	HIGH	HIGH	HIGH	HIGH	LOW	HIGH	UAT	LAT
B17, LAT	LOW	HIGH	HIGH	HIGH	LOW	HIGH	HIGH	LAT	UAT
B17, UAT	LOW	HIGH	HIGH	HIGH	LOW	LOW	HIGH	UAT	LAT
B20, LAT	LOW	HIGH	HIGH	LOW	HIGH	HIGH	HIGH	LAT	UAT
B20, UAT	LOW	HIGH	HIGH	LOW	HIGH	LOW	HIGH	UAT	LAT
OFF	LOW	LOW	HIGH	HIGH	X	X	X	X	X
STANDBY	LOW	LOW	LOW	LOW	LOW	LOW	LOW	X	X

LAT = LOWER ANTENNA
UAT = UPPER ANTENNA
OFF = LOWEST POWER STATE WITHOUT REMOVING LDO14_2V65 POWER
STANDBY = ADDED TO SUPPORT EXISTING SW ARCHITECTURE. NOT TO BE USED AS A LOW POWER STATE.

FOXCONN-EE

CONFIDENTIAL AND PROPRIETARY APPLE SYSTEM DESIGN. FOR REFERENCE PURPOSE ONLY - NOT A CHANGE REQUEST

PAGE TITLE: 2G FEM LOGIC TABLE (2 OF 2)

Apple Inc.

DRAWING NUMBER: 051-9478 SIZE: D

REVISION: 8.0.0

BRANCH:

PAGE: 22 OF 23

SHEET: 55 OF 56

NOTICE OF PROPRIETARY PROPERTY:
THE INFORMATION CONTAINED HEREIN IS THE PROPRIETARY PROPERTY OF APPLE INC.
THE POSESSOR AGREES TO THE FOLLOWING:
I TO MAINTAIN THIS DOCUMENT IN CONFIDENCE
II NOT TO REPRODUCE OR COPY IT
III NOT TO REVEAL OR PUBLISH IT IN WHOLE OR PART
IV ALL RIGHTS RESERVED

WLAN/BT

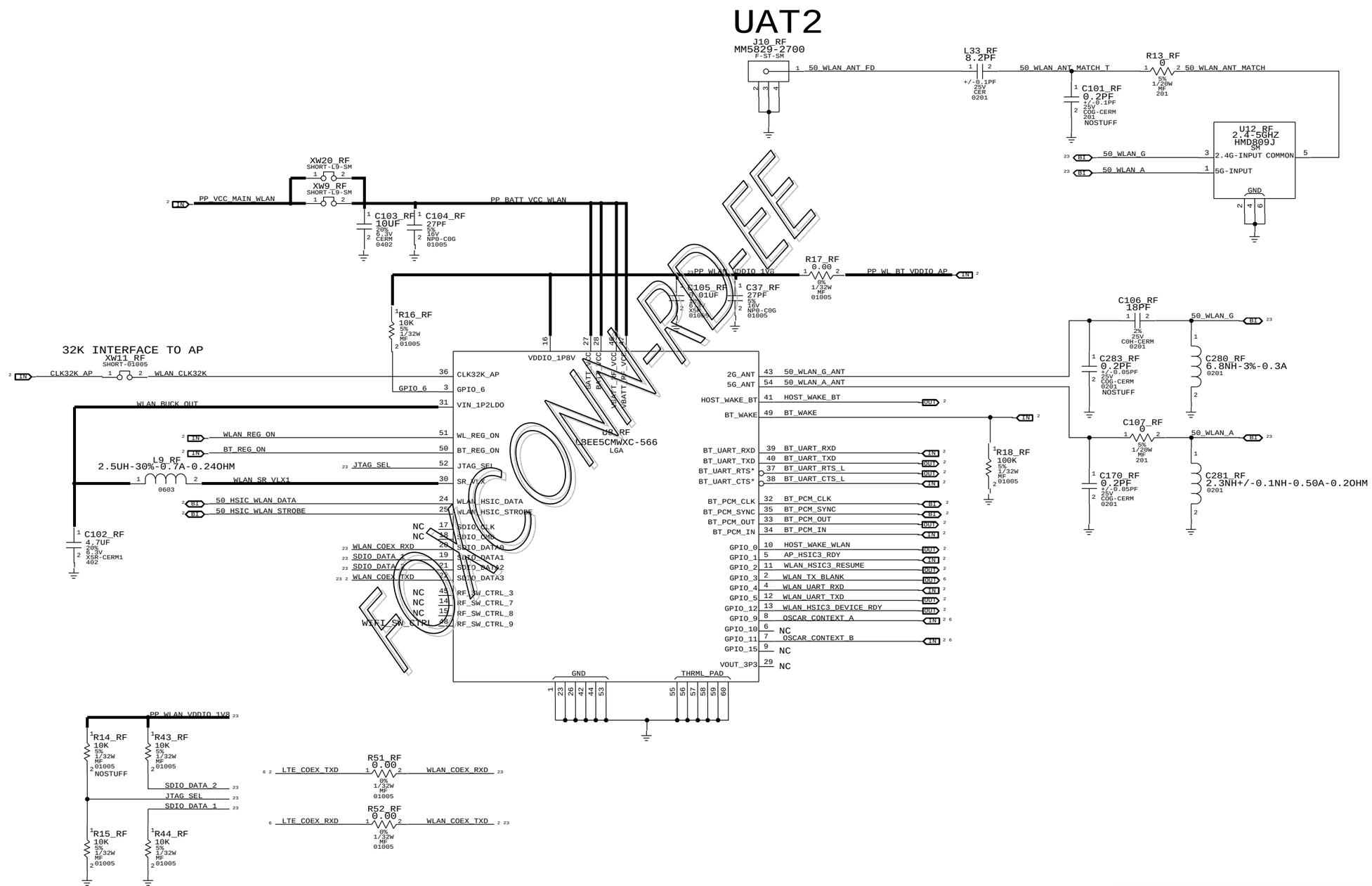

PULL-UP ON GPIO6, SDIO_DATA_2 & PULL-DOWN ON SDIO_DATA_1 REQUIRED FOR HSIC BOOTSTRAPPING

CONFIDENTIAL AND PROPRIETARY APPLE SYSTEM DESIGN. FOR REFERENCE PURPOSE ONLY - NOT A CHANGE REQUEST

PAGE TITLE
WIFI/BT: MODULE AND FRONT END

Apple Inc.

DRAWING NUMBER 051-9478 SIZE D
REVISION 8.0.0
BRANCH
PAGE 23 OF 23
SHEET 56 OF 56

NOTICE OF PROPRIETARY PROPERTY:
THE INFORMATION CONTAINED HEREIN IS THE PROPRIETARY PROPERTY OF APPLE INC.
THE POSESSOR AGREES TO THE FOLLOWING:
I TO MAINTAIN THIS DOCUMENT IN CONFIDENCE
II NOT TO REPRODUCE OR COPY IT
III NOT TO REVEAL OR PUBLISH IT IN WHOLE OR PART
IV ALL RIGHTS RESERVED