1. ALL RESISTANCE VALUES ARE IN OHMS, 5 % WATT +/- 5%.
2. ALL CAPACITANCE VALUES ARE IN MICROFARADS.
3. ALL CRYSTALS & OSCILLATOR VALUES ARE IN MEHTZ

REV	ECN	DESCRIPTION OF REVISION	APPRO	DATE
0	0004400977	ENGINEERING RELEASED		2016-06-16

D10 MLB - DVT

LAST_MODIFICATION=Tue Jun 14 15:20:28 2016

PAGE	<CSA>	CONTENTS	SYNC	DATE	PAGE	<CSA>	CONTENTS	SYNC	DATE
1	<TB.TOC>	TABLE OF CONTENTS	<SYNC_MASTER1>	<SYNC_DATE>	45	<TB.TOC>	SMALL FORM FACTOR SPECIFIC	<SYNC_MASTER4>	<SYNC_DATE>
2	<TB.TOC>	SYSTEM-NOR TABLES	<SYNC_MASTER2>	<SYNC_DATE>	47	<TB.TOC>	CIC RAM: AP, TDIOCR, MONMON, CLCTS	<SYNC_MASTER4A>	<SYNC_DATE>
3	<TB.TOC>	MLB CONFIGS	<SYNC_MASTER3>	<SYNC_DATE>	48	<TB.TOC>	CIC RAM ADF	<SYNC_MASTER4B>	<SYNC_DATE>
4	<TB.TOC>	SYSTEM-MECHANICAL, TESTPOINTS	<SYNC_MASTER4>	<SYNC_DATE>	49	<TB.TOC>	CIC TABLE	<SYNC_MASTER4C>	<SYNC_DATE>
5	<TB.TOC>	SYSTEM-GRAPHICS	<SYNC_MASTER5>	<SYNC_DATE>	50	<TB.TOC>	mpack	<SYNC_MASTER5A>	<SYNC_DATE>
6	<TB.TOC>	mpack	<SYNC_MASTER6>	<SYNC_DATE>	51	<TB.TOC>	mpack	<SYNC_MASTER5B>	<SYNC_DATE>
7	<TB.TOC>	AVC/PAL/SER/ETHG	<SYNC_MASTER7>	<SYNC_DATE>	52	<TB.TOC>	MLB DECODE	<SYNC_MASTER5C>	<SYNC_DATE>
8	<TB.TOC>	AVC/VIDEO	<SYNC_MASTER8>	<SYNC_DATE>	53	<TB.TOC>	MLB_DEC_APD	<SYNC_MASTER5D>	<SYNC_DATE>
9	<TB.TOC>	AVC/PCIV: ARC CDP	<SYNC_MASTER9>	<SYNC_DATE>	54	<TB.TOC>	MCIV_MLB DCONNECT	<SYNC_MASTER5E>	<SYNC_DATE>
10	<TB.TOC>	AVC/LPDP	<SYNC_MASTER10>	<SYNC_DATE>	55	<TB.TOC>	PPDEMUXA	<SYNC_MASTER5F>	<SYNC_DATE>
11	<TB.TOC>	AVC/ANALOG	<SYNC_MASTER11>	<SYNC_DATE>	56	<TB.TOC>	MCIV PCMCO-DEO (1?)	<SYNC_MASTER5G>	<SYNC_DATE>
12	<TB.TOC>	AVC/ATV & SMPT	<SYNC_MASTER12>	<SYNC_DATE>	57	<TB.TOC>	pmgr1	<SYNC_MASTER5H>	<SYNC_DATE>
13	<TB.TOC>	AVC/ACP	<SYNC_MASTER13>	<SYNC_DATE>	58	<TB.TOC>	BFC	<SYNC_MASTER5I>	<SYNC_DATE>
14	<TB.TOC>	AVC/POWER (1?3)	<SYNC_MASTER14>	<SYNC_DATE>	59	<TB.TOC>	pmgr2 (1?)	<SYNC_MASTER5J>	<SYNC_DATE>
15	<TB.TOC>	AVC/POWER (2?3)	<SYNC_MASTER15>	<SYNC_DATE>	60	<TB.TOC>	CRT MATCH AND TUNER CONNECTOR (2)	<SYNC_MASTER5K>	<SYNC_DATE>
16	<TB.TOC>	AVC/POWER (3?3)	<SYNC_MASTER16>	<SYNC_DATE>	61	<TB.TOC>	NOR LCC2	<SYNC_MASTER5L>	<SYNC_DATE>
17	<TB.TOC>	BOOT	<SYNC_MASTER17>	<SYNC_DATE>	62	<TB.TOC>	pmgr3	<SYNC_MASTER5M>	<SYNC_DATE>
18	<TB.TOC>	SYSTEM POWER:PMU (1?3)	<SYNC_MASTER18>	<SYNC_DATE>	63	<TB.TOC>	MLB_DEC_TABLE	<SYNC_MASTER5N>	<SYNC_DATE>
19	<TB.TOC>	SYSTEM POWER:PMU (2?3)	<SYNC_MASTER19>	<SYNC_DATE>	64	<TB.TOC>	PMU: CONTROL AND CLKCTRL	<SYNC_MASTER6A>	<SYNC_DATE>
20	<TB.TOC>	SYSTEM POWER:PMU (3?3)	<SYNC_MASTER20>	<SYNC_DATE>	65	<TB.TOC>	PMU: PHYTOPSMS AND LDOS	<SYNC_MASTER6B>	<SYNC_DATE>
21	<TB.TOC>	SYSTEM POWER:CHARGER	<SYNC_MASTER21>	<SYNC_DATE>	66	<TB.TOC>	MAXSPARSH: POWERS	<SYNC_MASTER6C>	<SYNC_DATE>
22	<TB.TOC>	SYSTEM POWER:BATTERY CONN	<SYNC_MASTER22>	<SYNC_DATE>	67	<TB.TOC>	MAXSPARSH: CONTROL	<SYNC_MASTER6D>	<SYNC_DATE>
23	<TB.TOC>	SYSTEM POWER:BOOST	<SYNC_MASTER23>	<SYNC_DATE>	68	<TB.TOC>	MAXSPARSH DRIVE	<SYNC_MASTER6E>	<SYNC_DATE>
24	<TB.TOC>	EMBEDMA	<SYNC_MASTER24>	<SYNC_DATE>	69	<TB.TOC>	TRANSCEIVERS(1) POWER	<SYNC_MASTER6F>	<SYNC_DATE>
25	<TB.TOC>	BIN FILTERS: CPAM	<SYNC_MASTER25>	<SYNC_DATE>	70	<TB.TOC>	TRANSCEIVERS(1) TX PORTS	<SYNC_MASTER6G>	<SYNC_DATE>
26	<TB.TOC>	CAMERA:STROBE DRIVER	<SYNC_MASTER26>	<SYNC_DATE>	71	<TB.TOC>	TRANSCEIVERS(1) PRX PORTS	<SYNC_MASTER6H>	<SYNC_DATE>
27	<TB.TOC>	Antenna(s): Main Diversity	<SYNC_MASTER27>	<SYNC_DATE>	72	<TB.TOC>	MESSIAH MATCHING	<SYNC_MASTER6I>	<SYNC_DATE>
28	<TB.TOC>	TRIQUINT: FP SPECIFIC	<SYNC_MASTER28>	<SYNC_DATE>	73	<TB.TOC>	LOWER ANTENNA & CONPLEXER	<SYNC_MASTER6J>	<SYNC_DATE>
29	<TB.TOC>	SKY:FRONTEND	<SYNC_MASTER29>	<SYNC_DATE>	74	<TB.TOC>	UPPER ANTENNA FEEDS & MATCH	<SYNC_MASTER6K>	<SYNC_DATE>
30	<TB.TOC>	mpack	<SYNC_MASTER30>	<SYNC_DATE>	75	<TB.TOC>	MESSIAH:TX BASTOUN LAN 0	<SYNC_MASTER6L>	<SYNC_DATE>
31	<TB.TOC>	AGCCC:CALIFRA CORE(1/2)	<SYNC_MASTER31>	<SYNC_DATE>	76	<TB.TOC>	UPPER ANTENNA FEEDS	<SYNC_MASTER6M>	<SYNC_DATE>
32	<TB.TOC>	AGCCC:CALIFRA CORE(2/2)	<SYNC_MASTER32>	<SYNC_DATE>	77	<TB.TOC>	PMU: RT REGULATOR	<SYNC_MASTER7A>	<SYNC_DATE>
33	<TB.TOC>	AGCCC:CPTRAPER ANP 1	<SYNC_MASTER33>	<SYNC_DATE>	78	<TB.TOC>	TRIP PLIOTS & BOOT CONFIG	<SYNC_MASTER7B>	<SYNC_DATE>
34	<TB.TOC>	AGCCC:CPTRAPER ANP 2	<SYNC_MASTER34>	<SYNC_DATE>	79	<TB.TOC>	PCI TRANSMIT	<SYNC_MASTER7C>	<SYNC_DATE>
35	<TB.TOC>	AGCC:CRCTRER	<SYNC_MASTER35>	<SYNC_DATE>	80	<TB.TOC>	PCI TRANSMIT	<SYNC_MASTER8A>	<SYNC_DATE>
36	<TB.TOC>	ARC:MAGCCE	<SYNC_MASTER36>	<SYNC_DATE>	81	<TB.TOC>	CRYPTOLL, SIM, SERIAL_CONN	<SYNC_MASTER8B>	<SYNC_DATE>
37	<TB.TOC>	ICIP:LAT & MEDIA:POWER	<SYNC_MASTER37>	<SYNC_DATE>		<TB.TOC>	mpack	<SYNC_MASTER8C>	<SYNC_DATE>
38	<TB.TOC>	ICIP:MEDIA DEC	<SYNC_MASTER38>	<SYNC_DATE>		<TB.TOC>	mpack	<SYNC_MASTER8D>	<SYNC_DATE>
39	<TB.TOC>	ICIP:MEDIA: DISPLAY & TRACE	<SYNC_MASTER39>	<SYNC_DATE>		<TB.TOC>	mpack	<SYNC_MASTER8E>	<SYNC_DATE>
40	<TB.TOC>	TRIPTEM I	<SYNC_MASTER40>	<SYNC_DATE>		<TB.TOC>	mpack	<SYNC_MASTER8F>	<SYNC_DATE>
41	<TB.TOC>	BIN:NOTE FLAS	<SYNC_MASTER41>	<SYNC_DATE>		<TB.TOC>	mpack	<SYNC_MASTER8G>	<SYNC_DATE>
42	<TB.TOC>	mpack	<SYNC_MASTER42>	<SYNC_DATE>		<TB.TOC>	mpack	<SYNC_MASTER8H>	<SYNC_DATE>
43	<TB.TOC>	mpack	<SYNC_MASTER43>	<SYNC_DATE>		<TB.TOC>	mpack	<SYNC_MASTER8I>	<SYNC_DATE>
44	<TB.TOC>	BIN FILTERS: EIGHT BUTTON FLAS	<SYNC_MASTER44>	<SYNC_DATE>		<TB.TOC>	mpack	<SYNC_MASTER8J>	<SYNC_DATE>
45	<TB.TOC>	BIN: SMALL FF SPECIFIC	<SYNC_MASTER45>	<SYNC_DATE>		<TB.TOC>	mpack	<SYNC_MASTER8K>	<SYNC_DATE>

TABLE OF CONTENTS

Schematic & PCB Callouts

PAGE	QT	DESCRIPTION	REFERENCE DESIGNATORS	DETAIL	DESCRIPTION
010-00000	1	MLB,D10,DVT	N/A	SECTION	MAIN_PCB
010-00100	1	MLB,D10,A,C1	N/A	SECTION	1

System Block Diagram:

<rdar://problem/16684269>

SCH 051-00419
BRD 820-00188
MCO 056-01342

TABLE OF CONTENTS

spare | Apple Inc. | 051-00419 | 0 | 8.0.0 | 4 OF 53 | 4 OF 81

NOTICE OF PROPRIETARY PROPERTY:
THE INFORMATION CONTAINED HEREIN IS THE PROPERTY OF APPLE INC.
EXCEPT AS SPECIFICALLY AGREED TO IN WRITING BY APPLE INC. THE INFORMATION CONTAINED HEREIN IS CONFIDENTIAL
- NOT TO REPRODUCE OR COPY IT
- NOT TO DISCLOSE OR DISTRIBUTE IT TO ANYONE OUTSIDE YOUR COMPANY
- NOT TO USE IT FOR ANY PURPOSE OTHER THAN THE PURPOSE FOR WHICH IT IS PROVIDED TO YOU.

NAND BOM Options

BOM OPTION	QT	DESCRIPTION	REFERENCE DESIGNATORS	DETAIL	DESCRIPTION
338S0000	1	16G,2.4GB,VSLC	U270	SECTION	NAND_VSLC
338S0100	1	32G,2.4GB,VSLC	U270	SECTION	NAND_VSLC
338S0200	1	64G,2.4GB,VSLC	U270	SECTION	NAND_VSLC
338S0300	2	16G,2GB,2CE,1CE/1RB,8BA,VSLC	U3600/U3601/U3602/U3603	SECTION	NAND_VSLC
338S0400	2	32G,2GB,2CE,1CE/1RB,8BA,VSLC	U3600/U3601/U3602/U3603	SECTION	NAND_VSLC
338S0500	2	64G,2GB,2CE,1CE/1RB,8BA,VSLC	U3600/U3601/U3602/U3603	SECTION	NAND_VSLC

PART NUMBER	ALTERNATE PART NUMBER	BOM OPTION	REF DES	COMMENTS
338S0101	338S0120	ALTERNATE	U270	1.2GB,8BA,VSLC,32GB
338S0102	338S0122	ALTERNATE	U270	1.2GB,8BA,VSLC,64GB
338S0103	338S0123	ALTERNATE	U270	1.2GB,8BA,VSLC,16GB
338S0120	338S0100	ALTERNATE	U270	8.2GB,8BA,VSLC,32GB
338S0121	338S0200	ALTERNATE	U270	8.2GB,8BA,VSLC,64GB
338S0122	338S0300	ALTERNATE	U270	8.2GB,8BA,VSLC,16GB
338S0123	338S0400	ALTERNATE	U270	8.2GB,8BA,VSLC,32GB

#CCHANGE:Item Number

Active Diode Alternate

PART NUMBER	ALTERNATE PART NUMBER	BOM OPTION	REF DES	COMMENTS
150S0100	150S0010	ALTERNATE	D2101	SOD80 SMC SAT DIOD

DDR PLL Alternate

PART NUMBER	ALTERNATE PART NUMBER	BOM OPTION	REF DES	COMMENTS
338S0000	338S0080	ALTERNATE	PLL500	8ch:8ch:1ch:8ch:1

Power Inductor Alternates

PART NUMBER	ALTERNATE PART NUMBER	BOM OPTION	REF DES	COMMENTS
1530S0000	1530S0010	ALTERNATE	L2400	0.8uH,1.1A,0.09R,0.8mm
1530S0100	1530S0110	ALTERNATE	L2401	0.8uH,1.1A,0.09R,0.8mm
1530S0200	1530S0210	ALTERNATE	L2402	0.8uH,1.1A,0.09R,0.8mm
1530S0300	1530S0310	ALTERNATE	L2403	0.8uH,1.1A,0.09R,0.8mm
1530S0400	1530S0410	ALTERNATE	L2404	0.8uH,1.1A,0.09R,0.8mm
1530S0500	1530S0510	ALTERNATE	L2405	0.8uH,1.1A,0.09R,0.8mm
1530S0600	1530S0610	ALTERNATE	L2406	0.8uH,1.1A,0.09R,0.8mm
1530S0700	1530S0710	ALTERNATE	L2407	0.8uH,1.1A,0.09R,0.8mm
1530S0800	1530S0810	ALTERNATE	L2408	0.8uH,1.1A,0.09R,0.8mm
1530S0900	1530S0910	ALTERNATE	L2409	0.8uH,1.1A,0.09R,0.8mm
1530S0A00	1530S0A10	ALTERNATE	L2410	0.8uH,1.1A,0.09R,0.8mm
1530S0B00	1530S0B10	ALTERNATE	L2411	0.8uH,1.1A,0.09R,0.8mm
1530S0C00	1530S0C10	ALTERNATE	L2412	0.8uH,1.1A,0.09R,0.8mm
1530S0D00	1530S0D10	ALTERNATE	L2413	0.8uH,1.1A,0.09R,0.8mm
1530S0E00	1530S0E10	ALTERNATE	L2414	0.8uH,1.1A,0.09R,0.8mm
1530S0F00	1530S0F10	ALTERNATE	L2415	0.8uH,1.1A,0.09R,0.8mm
1530S0G00	1530S0G10	ALTERNATE	L2416	0.8uH,1.1A,0.09R,0.8mm

ACC BUCK CIRCUIT Alternates

PART NUMBER	ALTERNATE PART NUMBER	BOM OPTION	REF DES	COMMENTS
1530S0P00	1530S0R00	ALTERNATE	U2700	2MH,800mA,0.24Ohm
1530S0R00	1530S0P00	ALTERNATE	L2700	2MH,800mA,0.24Ohm
1530S0T00	1530S0U00	ALTERNATE	U2701	4MH,0.5A
1530S0U00	1530S0T00	ALTERNATE	L2701	4.7uH,0.5A,0.4Ohm

Magnesium Alternates

PART NUMBER	ALTERNATE PART NUMBER	BOM OPTION	REF DES	COMMENTS
338S0000	338S0080	ALTERNATE	U270	16G,VSLC

Carbon Alternates

PART NUMBER	ALTERNATE PART NUMBER	BOM OPTION	REF DES	COMMENTS
1530S0V00	1530S0W00	ALTERNATE	L2800	0.8uH,0.9A,0.12Ohm

UT LDO Alternates

PART NUMBER	ALTERNATE PART NUMBER	BOM OPTION	REF DES	COMMENTS
339S0000	339S0010	ALTERNATE	U3900	1.8,0.3V,1.5V

Mamba LDO Alternates

PART NUMBER	ALTERNATE PART NUMBER	BOM OPTION	REF DES	COMMENTS
339S0000	339S0010	ALTERNATE	U3901	1.8,0.3V,1.5V

I2C5 Alternate

PART NUMBER	ALTERNATE PART NUMBER	BOM OPTION	REF DES	COMMENTS
338S0230	338S0010	ALTERNATE	U2400	1.2,mamba

Global R/C Alternates

PART NUMBER	ALTERNATE PART NUMBER	BOM OPTION	REF DES	COMMENTS
1580-0700	1580-0710	ALTERNATE	R2	0R,1/16W,1%,SM,SM
1580-0710	1580-0017	ALTERNATE	R2	0R,1/8W,1%,SM,SM
1580-0000	1580-0010	ALTERNATE	R2	0R,1/8W,1%,SM,SM
1580-0100	1580-0110	ALTERNATE	R2	0R,1/8W,1%,SM,SM
1580-0200	1580-0210	ALTERNATE	R2	0R,1/8W,1%,SM,SM
1580-0300	1580-0310	ALTERNATE	R2	0R,1/8W,1%,SM,SM
1580-0400	1580-0410	ALTERNATE	R2	0R,1/8W,1%,SM,SM
1580-0500	1580-0510	ALTERNATE	R2	0R,1/8W,1%,SM,SM
1580-0600	1580-0610	ALTERNATE	R2	0R,1/8W,1%,SM,SM
1580-0710	1580-0700	ALTERNATE	R2	0R,1/16W,1%,SM,SM
1580-0800	1580-0810	ALTERNATE	R2	0R,1/8W,1%,SM,SM
1580-0900	1580-0910	ALTERNATE	R2	0R,1/8W,1%,SM,SM
1580-0A00	1580-0A10	ALTERNATE	R2	0R,1/8W,1%,SM,SM

Global Ferrite Alternates

PART NUMBER	ALTERNATE PART NUMBER	BOM OPTION	REF DES	COMMENTS
1500-0000	1500-0010	ALTERNATE	R2	0R,1/8W,1%,SM,SM
1500-0100	1500-0110	ALTERNATE	R2	0R,1/8W,1%,SM,SM
1500-0200	1500-0210	ALTERNATE	R2	0R,1/8W,1%,SM,SM
1500-0300	1500-0310	ALTERNATE	R2	0R,1/8W,1%,SM,SM
1500-0400	1500-0410	ALTERNATE	R2	0R,1/8W,1%,SM,SM
1500-0500	1500-0510	ALTERNATE	R2	0R,1/8W,1%,SM,SM
1500-0600	1500-0610	ALTERNATE	R2	0R,1/8W,1%,SM,SM
1500-0700	1500-0710	ALTERNATE	R2	0R,1/8W,1%,SM,SM
1500-0800	1500-0810	ALTERNATE	R2	0R,1/8W,1%,SM,SM
1500-0900	1500-0910	ALTERNATE	R2	0R,1/8W,1%,SM,SM
1500-0A00	1500-0A10	ALTERNATE	R2	0R,1/8W,1%,SM,SM

Global Varistor Alternates

PART NUMBER	ALTERNATE PART NUMBER	BOM OPTION	REF DES	COMMENTS
1740-0100	1740-0110	ALTERNATE	R2	0R,1/8W,1%,SM,SM

spare | Apple Inc. | 051-00419 | 0 | 8.0.0 | 5 OF 53 | 5 OF 81

NOTICE OF PROPRIETARY PROPERTY:
THE INFORMATION CONTAINED HEREIN IS THE PROPERTY OF APPLE INC.
EXCEPT AS SPECIFICALLY AGREED TO IN WRITING BY APPLE INC. THE INFORMATION CONTAINED HEREIN IS CONFIDENTIAL
- NOT TO REPRODUCE OR COPY IT
- NOT TO DISCLOSE OR DISTRIBUTE IT TO ANYONE OUTSIDE YOUR COMPANY
- NOT TO USE IT FOR ANY PURPOSE OTHER THAN THE PURPOSE FOR WHICH IT IS PROVIDED TO YOU.

D10 EEEE CALLOUTS

BOARD	QTY	DESCRIPTION	REFERENCE DESIGNATORS	DETAIL	DESCRIPTION
820-0188	1	SMD:SOMC PCB:D10:TOP	SMD_PART	SECTION	SMD_PART
820-0189	1	SMD:SOMC PCB:D10:TOP2	SMD_PART	SMD_SOMCMB	
820-0190	1	SMD:SOMC PCB:D10:TOP3	SMD_PART	SMD_SOMCMB	
820-0191	1	SMD:SOMC PCB:D10:TOP4	SMD_PART	SMD_SOMC_BOM	
820-0192	1	SMD:SOMC PCB:D10:TOP5	SMD_PART	SMD_SOMCMB_BOM	
820-0193	1	SMD:SOMC PCB:D10:TOP6	SMD_PART	SMD_SOMCMB_BOM	

CAYMAN DDR Alternates

PART NUMBER	ALTERNATE PART NUMBER	BOM OPTION	REF DES	COMMENTS
338S0000	338S0010	ALTERNATE	R1	8Ch:2L,1G,1C
338S0100	338S0010	ALTERNATE	R1	8Ch:2L,1G,1C

Cap 2.2UF Alternates

PART NUMBER	ALTERNATE PART NUMBER	BOM OPTION	REF DES	COMMENTS
1130S0000	1130S0010	ALTERNATE	C2000	2.2uF,6.3V,X5R,0.1,0402

#CCHANGE:Item Number QT:2 CAP:2U 6.3V:0402:X5R:0.1 ALT:1130-0010 REF:C2000 LOCS:C2000,C2001

D10x Specific BOM Callouts

PARTS	QTY	DESCRIPTION	REFERENCE DESIGNATORS	DETAIL	DESCRIPTION	
338S0000	1	16G,2.4GB,VSLC,1CE/1RB,8BA,VSLC	U270	SECTION	NAND_VSLC	CHANGE
1170-0100	2	0R,0.1W,1%,1/16,SM	SHORT_SHORT	SECTION	TRACE_C	DEVICE

Current as of D10 MCO 056-01342-78

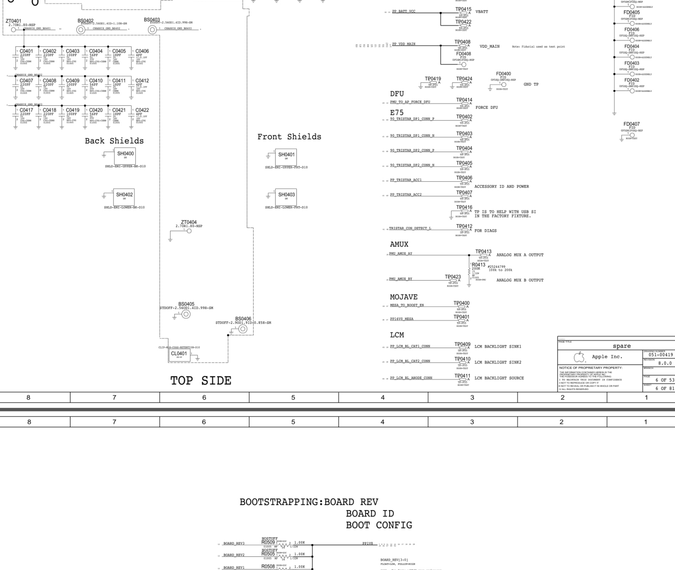

TESTPOINTS

spare | Apple Inc. | 051-00419 | 0 | 8.0.0 | 6 OF 53 | 6 OF 81

NOTICE OF PROPRIETARY PROPERTY:
THE INFORMATION CONTAINED HEREIN IS THE PROPERTY OF APPLE INC.
EXCEPT AS SPECIFICALLY AGREED TO IN WRITING BY APPLE INC. THE INFORMATION CONTAINED HEREIN IS CONFIDENTIAL
- NOT TO REPRODUCE OR COPY IT
- NOT TO DISCLOSE OR DISTRIBUTE IT TO ANYONE OUTSIDE YOUR COMPANY
- NOT TO USE IT FOR ANY PURPOSE OTHER THAN THE PURPOSE FOR WHICH IT IS PROVIDED TO YOU.

BOOTSTRAPPING:BOARD REV
BOARD ID
BOOT CONFIG

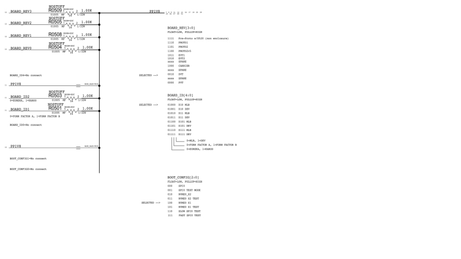

spare | Apple Inc. | 051-00419 | 0 | 8.0.0 | 7 OF 53 | 7 OF 81

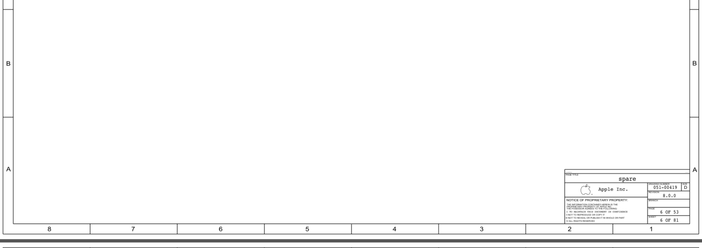
spare
Apple Inc.
051-00419
0.0.0
NOTICE OF PROPRIETARY PROPERTY:
4 OF 53
6 OF 81

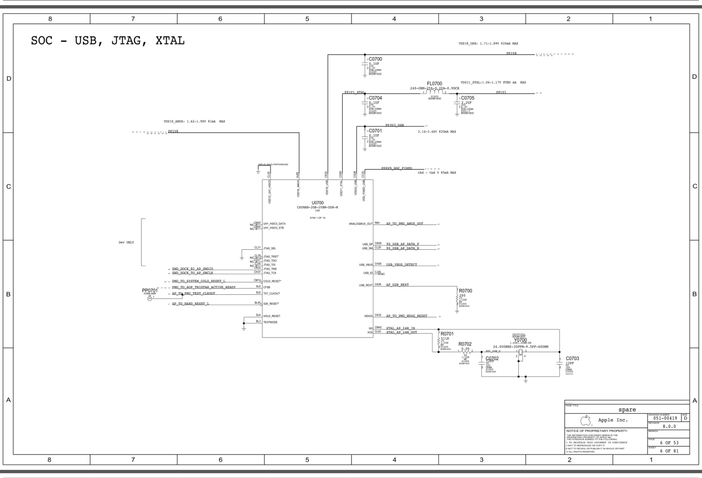
SOC - USB, JTAG, XTAL
U0700
CS70000-CUD-2500-000-A
FL0700
C0700
C0701
C0702
C0703
C0704
C0705
R0700
R0701
R0702
Q0100
X0100
24.000MHz
0.0P-40ppm
spare
Apple Inc.
051-00419
0.0.0
NOTICE OF PROPRIETARY PROPERTY:
5 OF 53
6 OF 81

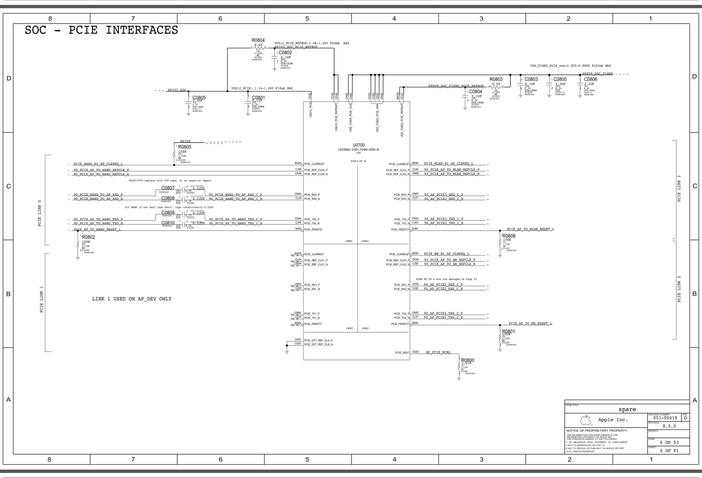
SOC - PCIE INTERFACES
U0700
CS70000-CUD-2500-000-A
R0864
R0863
C0863
C0860
C0866
R0865
R0866
R0867
R0868
R0869
R0870
R0871
R0872
R0873
R0874
R0875
R0876
R0877
R0878
R0879
R0880
R0881
R0882
R0883
R0884
R0885
R0886
R0887
R0888
R0889
R0890
R0891
R0892
R0893
R0894
R0895
R0896
R0897
R0898
R0899
R0900
R0901
R0902
R0903
R0904
R0905
C0805
C0807
C0808
C0809
C0810
C0811
C0812
C0813
C0814
C0815
C0816
C0817
C0818
C0819
C0820
C0821
C0822
C0823
C0824
C0825
C0826
C0827
C0828
C0829
C0830
C0831
C0832
C0833
C0834
C0835
C0836
C0837
C0838
C0839
C0840
C0841
C0842
C0843
C0844
C0845
C0846

SOC - GPIO INTERFACES

PAGE TITLE	spare
Apple Inc.	DRAWING NUMBER 051-00419 SIZE D
	REVISION 8.0.0
NOTICE OF PROPRIETARY PROPERTY:	BRANCH
	PAGE 6 OF 53
	SHEET 6 OF 81

SOC - AOP

PAGE TITLE	spare
Apple Inc.	DRAWING NUMBER 051-00419 SIZE D
	REVISION 8.0.0
NOTICE OF PROPRIETARY PROPERTY:	BRANCH
	PAGE 6 OF 53
	SHEET 6 OF 81

SOC - CPU, GPU & SOC RAILS

PAGE TITLE	spare
Apple Inc.	DRAWING NUMBER 051-00419 SIZE D
	REVISION 8.0.0
NOTICE OF PROPRIETARY PROPERTY:	BRANCH
	PAGE 6 OF 53
	SHEET 6 OF 81

SOC - POWER SUPPLIES

PAGE TITLE	spare
Apple Inc.	DRAWING NUMBER 051-00419 SIZE D
	REVISION 8.0.0
NOTICE OF PROPRIETARY PROPERTY:	BRANCH
	PAGE 6 OF 53
	SHEET 6 OF 81

SOC - POWER SUPPLIES

PAGE TITLE	spare
Apple Inc.	DRAWING NUMBER 051-00419 SIZE D
	REVISION 8.0.0
NOTICE OF PROPRIETARY PROPERTY:	BRANCH
	PAGE 6 OF 53
	SHEET 6 OF 81

PAGE TITLE	spare
Apple Inc.	DRAWING NUMBER 051-00419 SIZE D
	REVISION 8.0.0
NOTICE OF PROPRIETARY PROPERTY:	BRANCH
	PAGE 6 OF 53
	SHEET 6 OF 81

PAGE TITLE	spare
Apple Inc.	DRAWING NUMBER 051-00419 SIZE D
	REVISION 8.0.0
NOTICE OF PROPRIETARY PROPERTY:	BRANCH
	PAGE 6 OF 53
	SHEET 6 OF 81

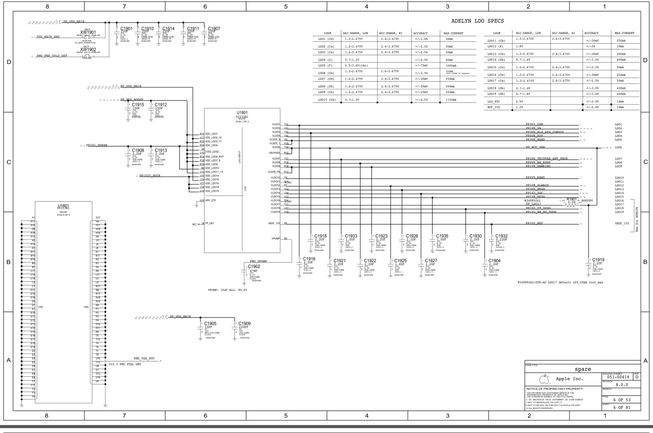
ADELYN LDO SPECS
U8900
U8901
U8902
U8903
U8904
U8905
U8906
U8907
U8908
U8909
U8910
U8911
U8912
U8913
U8914
U8915
U8916
U8917
U8918
U8919
U8920
U8921
U8922
U8923
U8924
U8925
U8926
U8927
U8928
U8929
U8930
U8931
U8932
U8933
U8934
U8935
U8936
U8937
U8938
U8939

THIS PAGE UNIQUE TO SMALL FORM FACTOR

UTAH POWER

IO FILTERS

LPDP FILTERS

spare	
Apple Inc.	051-00419 D
	SIZE 8.5.0
NOTICE OF PROPRIETARY PROPERTY: THE INFORMATION CONTAINED HERE IN IS THE PROPERTY OF APPLE INC. 1 N. MATHILDA AVENUE SUNNYVALE, CA 1987-2010 APPLE INC. ALL RIGHTS RESERVED.	
	4 OF 53
	4 OF 81

STROBE DRIVERS INSIDE NEO SIP MODULE

spare	
Apple Inc.	051-00419 D
	SIZE 8.5.0
NOTICE OF PROPRIETARY PROPERTY: THE INFORMATION CONTAINED HERE IN IS THE PROPERTY OF APPLE INC. 1 N. MATHILDA AVENUE SUNNYVALE, CA 1987-2010 APPLE INC. ALL RIGHTS RESERVED.	
	4 OF 53
	4 OF 81

ACCESSORY BUCK

FET Changes per #25687842 4/12/2016

spare	
Apple Inc.	051-00419 D
	SIZE 8.5.0
NOTICE OF PROPRIETARY PROPERTY: THE INFORMATION CONTAINED HERE IN IS THE PROPERTY OF APPLE INC. 1 N. MATHILDA AVENUE SUNNYVALE, CA 1987-2010 APPLE INC. ALL RIGHTS RESERVED.	
	4 OF 53
	4 OF 81

THIS PAGE UNIQUE TO SMALL FORM FACTOR

spare	
Apple Inc.	051-00419 D
	SIZE 8.5.0
NOTICE OF PROPRIETARY PROPERTY: THE INFORMATION CONTAINED HERE IN IS THE PROPERTY OF APPLE INC. 1 N. MATHILDA AVENUE SUNNYVALE, CA 1987-2010 APPLE INC. ALL RIGHTS RESERVED.	
	4 OF 53
	4 OF 81

NEW HAMPSHIRE POWER

PROX, ALS, & CONVOY POWER

NEW HAMPSHIRE I/O

SPEAKER2

CONVOY I/O

MIC3

PROX/ALS I/O

spare	
Apple Inc.	051-00419 D
	SIZE 8.5.0
NOTICE OF PROPRIETARY PROPERTY: THE INFORMATION CONTAINED HERE IN IS THE PROPERTY OF APPLE INC. 1 N. MATHILDA AVENUE SUNNYVALE, CA 1987-2010 APPLE INC. ALL RIGHTS RESERVED.	
	4 OF 53
	4 OF 81

PAGE TITLE: spare
Apple Inc.
DRAWING NUMBER: 051-00419 SIZE: D
REVISION: 8.0.0
BRANCH:
PAGE: 6 OF 53
SHEET: 6 OF 81
NOTICE OF PROPRIETARY PROPERTY:
THE INFORMATION CONTAINED HEREIN IS THE PROPRIETARY PROPERTY OF APPLE INC.
THE POSSESSOR AGREES TO THE FOLLOWING:
I TO MAINTAIN THIS DOCUMENT IN CONFIDENCE
II NOT TO REPRODUCE OR COPY IT
III NOT TO REVEAL OR PUBLISH IT IN WHOLE OR PART
IV ALL RIGHTS RESERVED

CALTRA AUDIO CODEC (ANALOG INPUTS & OUTPUTS)

PAGE TITLE: spare
Apple Inc.
DRAWING NUMBER: 051-00419 SIZE: D
REVISION: 8.0.0
BRANCH:
PAGE: 6 OF 53
SHEET: 6 OF 81
NOTICE OF PROPRIETARY PROPERTY:
THE INFORMATION CONTAINED HEREIN IS THE PROPRIETARY PROPERTY OF APPLE INC.
THE POSSESSOR AGREES TO THE FOLLOWING:
I TO MAINTAIN THIS DOCUMENT IN CONFIDENCE
II NOT TO REPRODUCE OR COPY IT
III NOT TO REVEAL OR PUBLISH IT IN WHOLE OR PART
IV ALL RIGHTS RESERVED

CALTRA AUDIO CODEC (POWER & I/O)

PAGE TITLE: spare
Apple Inc.
DRAWING NUMBER: 051-00419 SIZE: D
REVISION: 8.0.0
BRANCH:
PAGE: 6 OF 53
SHEET: 6 OF 81
NOTICE OF PROPRIETARY PROPERTY:
THE INFORMATION CONTAINED HEREIN IS THE PROPRIETARY PROPERTY OF APPLE INC.
THE POSSESSOR AGREES TO THE FOLLOWING:
I TO MAINTAIN THIS DOCUMENT IN CONFIDENCE
II NOT TO REPRODUCE OR COPY IT
III NOT TO REVEAL OR PUBLISH IT IN WHOLE OR PART
IV ALL RIGHTS RESERVED

SPEAKER AMPLIFIER 2 (North)

PAGE TITLE: spare
Apple Inc.
DRAWING NUMBER: 051-00419 SIZE: D
REVISION: 8.0.0
BRANCH:
PAGE: 6 OF 53
SHEET: 6 OF 81
NOTICE OF PROPRIETARY PROPERTY:
THE INFORMATION CONTAINED HEREIN IS THE PROPRIETARY PROPERTY OF APPLE INC.
THE POSSESSOR AGREES TO THE FOLLOWING:
I TO MAINTAIN THIS DOCUMENT IN CONFIDENCE
II NOT TO REPRODUCE OR COPY IT
III NOT TO REVEAL OR PUBLISH IT IN WHOLE OR PART
IV ALL RIGHTS RESERVED

SPEAKER AMPLIFIER 1 (South)

PAGE TITLE: spare
Apple Inc.
DRAWING NUMBER: 051-00419 SIZE: D
REVISION: 8.0.0
BRANCH:
PAGE: 6 OF 53
SHEET: 6 OF 81
NOTICE OF PROPRIETARY PROPERTY:
THE INFORMATION CONTAINED HEREIN IS THE PROPRIETARY PROPERTY OF APPLE INC.
THE POSSESSOR AGREES TO THE FOLLOWING:
I TO MAINTAIN THIS DOCUMENT IN CONFIDENCE
II NOT TO REPRODUCE OR COPY IT
III NOT TO REVEAL OR PUBLISH IT IN WHOLE OR PART
IV ALL RIGHTS RESERVED

ARC DRIVER

PAGE TITLE: spare
Apple Inc.
DRAWING NUMBER: 051-00419 SIZE: D
REVISION: 8.0.0
BRANCH:
PAGE: 6 OF 53
SHEET: 6 OF 81
NOTICE OF PROPRIETARY PROPERTY:
THE INFORMATION CONTAINED HEREIN IS THE PROPRIETARY PROPERTY OF APPLE INC.
THE POSSESSOR AGREES TO THE FOLLOWING:
I TO MAINTAIN THIS DOCUMENT IN CONFIDENCE
II NOT TO REPRODUCE OR COPY IT
III NOT TO REVEAL OR PUBLISH IT IN WHOLE OR PART
IV ALL RIGHTS RESERVED

MAGGIE LDO / MAGGIE / HOMER STM32L0 MICRO

PAGE TITLE: spare
Apple Inc.
DRAWING NUMBER: 051-00419 SIZE: D
REVISION: 8.0.0
BRANCH:
PAGE: 6 OF 53
SHEET: 6 OF 81
NOTICE OF PROPRIETARY PROPERTY:
THE INFORMATION CONTAINED HEREIN IS THE PROPRIETARY PROPERTY OF APPLE INC.
THE POSSESSOR AGREES TO THE FOLLOWING:
I TO MAINTAIN THIS DOCUMENT IN CONFIDENCE
II NOT TO REPRODUCE OR COPY IT
III NOT TO REVEAL OR PUBLISH IT IN WHOLE OR PART
IV ALL RIGHTS RESERVED

DISPLAY & TOUCH - POWER SUPPLIES

CHESTNUT DISPLAY PMU

APN:338S1172

LED BACKLIGHT DRIVER - 6LED

APN:353S00640

MOJAVE MESA BOOST

APN:353S00671

PAGE TITLE: spare
Apple Inc.
DRAWING NUMBER: 051-00419 SIZE: D
REVISION: 8.0.0
BRANCH:
PAGE: 6 OF 53
SHEET: 6 OF 81
NOTICE OF PROPRIETARY PROPERTY:
THE INFORMATION CONTAINED HEREIN IS THE PROPRIETARY PROPERTY OF APPLE INC.
THE POSSESSOR AGREES TO THE FOLLOWING:
I TO MAINTAIN THIS DOCUMENT IN CONFIDENCE
II NOT TO REPRODUCE OR COPY IT
III NOT TO REVEAL OR PUBLISH IT IN WHOLE OR PART
IV ALL RIGHTS RESERVED

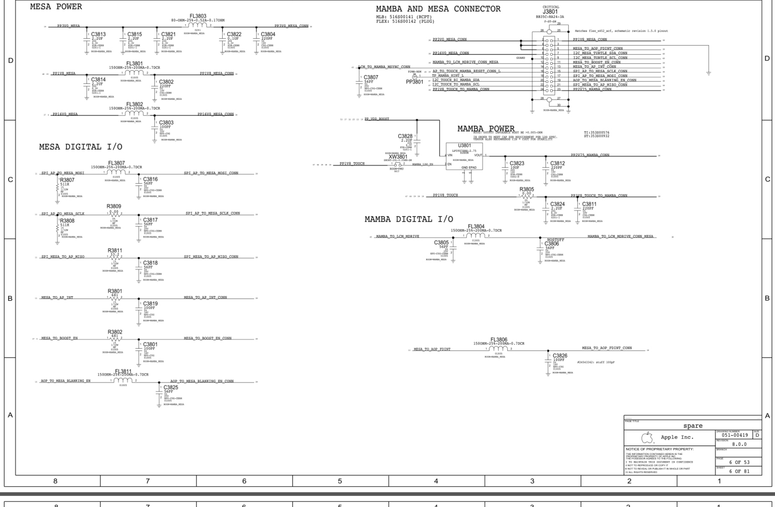
MESA POWER
MESA DIGITAL I/O
MAMBA AND MESA CONNECTOR
MAMBA POWER
MAMBA DIGITAL I/O
spare
Apple Inc.
051-00419
8.0.0
4 OF 53
4 OF 81

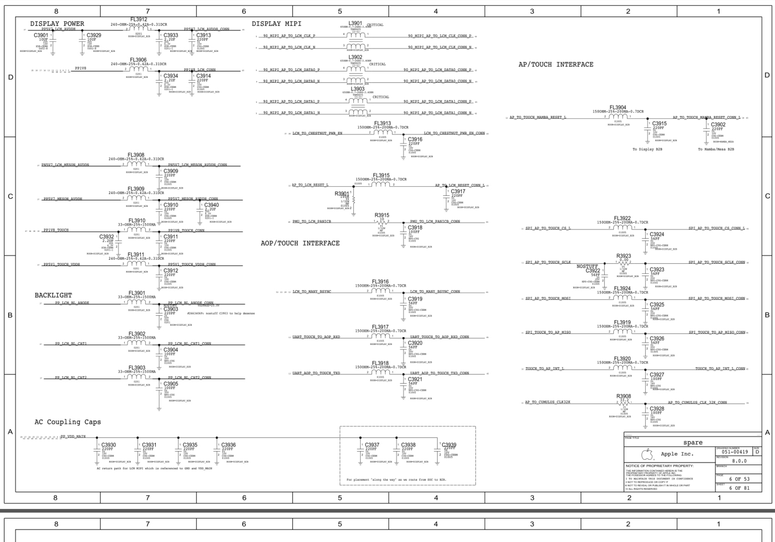
DISPLAY POWER
DISPLAY MIPI
AP/TOUCH INTERFACE
BACKLIGHT
AOP/TOUCH INTERFACE
AC Coupling Caps
spare
Apple Inc.
051-00419
8.0.0
4 OF 53
4 OF 81

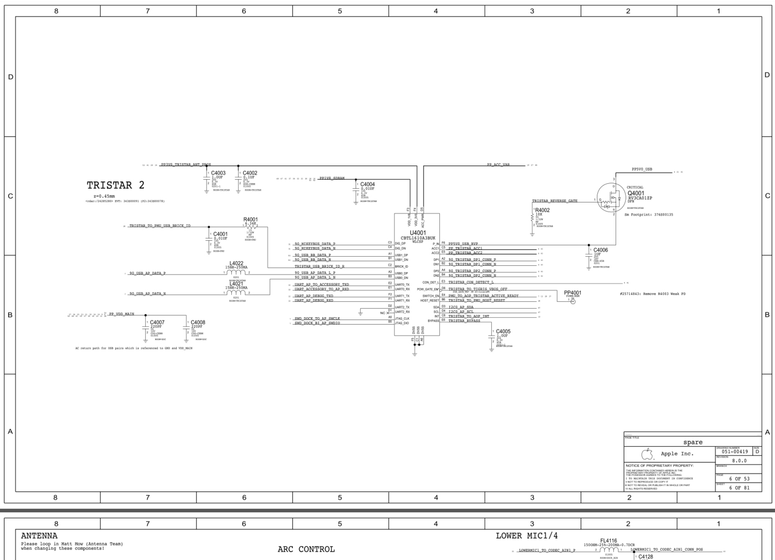
TRISTAR 2
spare
Apple Inc.
051-00419
8.0.0
4 OF 53
4 OF 81

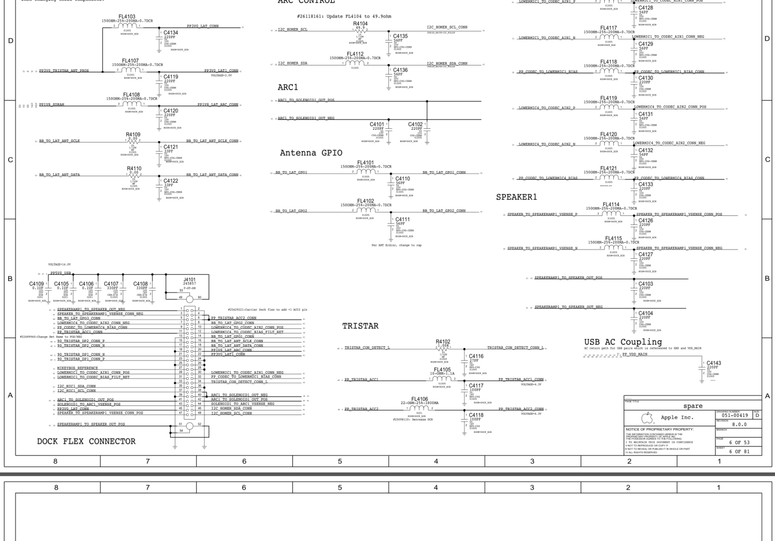
ANTENNA
ARC CONTROL
ARC1
Antenna GPIO
TRISTAR
DOCK FLEX CONNECTOR
LOWER MIC1/4
SPEAKER1
USB AC Coupling
spare
Apple Inc.
051-00419
8.0.0
4 OF 53
4 OF 81

STROBE1

STROBE2

BUTTONS

HAWKING

MIC2 (ANC REF)

PAGE TITLE	spare
Apple Inc.	DRAWING NUMBER 051-00419 SIZE D
	REVISION 8.0.0
NOTICE OF PROPRIETARY PROPERTY: THE INFORMATION CONTAINED HEREIN IS THE PROPRIETARY PROPERTY OF APPLE INC. THE POSESSOR AGREES TO THE FOLLOWING: I TO MAINTAIN THIS DOCUMENT IN CONFIDENCE II NOT TO REPRODUCE OR COPY IT III NOT TO REVEAL OR PUBLISH IT IN WHOLE OR PART IV ALL RIGHTS RESERVED	BRANCH
	PAGE 6 OF 53
	SHEET 6 OF 81

THIS PAGE UNIQUE TO SMALL FORM FACTOR

UTAH-C FLEX CONNECTOR

THIS ONE ---> 516800152 RCPT (USED ON MLB)
516800151 PLUG

COMBINED BUTTON FLEX CONNECTOR

MLB APN: 516800150
FLEX APN: 516800149

DISPLAY / TOUCH FLEX CONNECTOR

THIS ONE ---> 516800138 RCPT (USED ON MLB)
516800137 PLUG

FOREHEAD FLEX CONNECTOR

THIS ONE ---> 516800146 RCPT (USED ON MLB)
516800145 PLUG

PAGE TITLE	spare
Apple Inc.	DRAWING NUMBER 051-00419 SIZE D
	REVISION 8.0.0
NOTICE OF PROPRIETARY PROPERTY: THE INFORMATION CONTAINED HEREIN IS THE PROPRIETARY PROPERTY OF APPLE INC. THE POSESSOR AGREES TO THE FOLLOWING: I TO MAINTAIN THIS DOCUMENT IN CONFIDENCE II NOT TO REPRODUCE OR COPY IT III NOT TO REVEAL OR PUBLISH IT IN WHOLE OR PART IV ALL RIGHTS RESERVED	BRANCH
	PAGE 6 OF 53
	SHEET 6 OF 81

THIS PAGE UNIQUE TO SMALL FORM FACTOR

OTHER SMALL FORM FACTOR SPECIFIC PAGES:
4 - MECHANICAL

ISP I2C1

TOUCH I2C

NC Nets in Small FF

UT B2B

VDD_MAIN Cap

Top Speaker Compass Coil

Dock B2B (Pg 41)

ACC Buck Caps

PAGE TITLE	spare
Apple Inc.	DRAWING NUMBER 051-00419 SIZE D
	REVISION 8.0.0
NOTICE OF PROPRIETARY PROPERTY: THE INFORMATION CONTAINED HEREIN IS THE PROPRIETARY PROPERTY OF APPLE INC. THE POSESSOR AGREES TO THE FOLLOWING: I TO MAINTAIN THIS DOCUMENT IN CONFIDENCE II NOT TO REPRODUCE OR COPY IT III NOT TO REVEAL OR PUBLISH IT IN WHOLE OR PART IV ALL RIGHTS RESERVED	BRANCH
	PAGE 6 OF 53
	SHEET 6 OF 81

AP

I2C0

I2C1

I2C2

TOUCH

HOMER

I2C5

I2C3

PAGE TITLE	spare
Apple Inc.	DRAWING NUMBER 051-00419 SIZE D
	REVISION 8.0.0
NOTICE OF PROPRIETARY PROPERTY: THE INFORMATION CONTAINED HEREIN IS THE PROPRIETARY PROPERTY OF APPLE INC. THE POSESSOR AGREES TO THE FOLLOWING: I TO MAINTAIN THIS DOCUMENT IN CONFIDENCE II NOT TO REPRODUCE OR COPY IT III NOT TO REVEAL OR PUBLISH IT IN WHOLE OR PART IV ALL RIGHTS RESERVED	BRANCH
	PAGE 6 OF 53
	SHEET 6 OF 81

AOP

I2C

ISP

I2C0

I2C1

See page 46

I2C2

PAGE TITLE	spare
Apple Inc.	DRAWING NUMBER 051-00419 SIZE D
	REVISION 8.0.0
NOTICE OF PROPRIETARY PROPERTY: THE INFORMATION CONTAINED HEREIN IS THE PROPRIETARY PROPERTY OF APPLE INC. THE POSESSOR AGREES TO THE FOLLOWING: I TO MAINTAIN THIS DOCUMENT IN CONFIDENCE II NOT TO REPRODUCE OR COPY IT III NOT TO REVEAL OR PUBLISH IT IN WHOLE OR PART IV ALL RIGHTS RESERVED	BRANCH
	PAGE 6 OF 53
	SHEET 6 OF 81

D1x I2C Table

Bus	Device	Binary	7-bit Address	8-bit Address	Max Speed
ISP I2C0 1MHz	SALT LAKE (PRIMARY)	0010000X	0x10	0x20	1 MHz
	SALT LAKE (SECONDARY)	0110000X	0x30	0x60	1 MHz
	GRUNBERG (STANDARD)	0011100X	0x1C	0x38	1 MHz
	GRUNBERG (SPECIAL ABSOLUTE R/W)	0011101X	0x1D	0x3A	1 MHz
	GRUNBERG (SPECIAL DELTA READ)	0011110X	0x1E	0x3C	1 MHz
	STROBE 1	1100011X	0x63	0xC6	1 MHz
ISP I2C1 1MHz	LAS VEGAS (PRIMARY)	0100000X	0x20	0x40	1 MHz
	LAS VEGAS (SECONDARY)	0110000X	0x30	0x60	1 MHz
	EDWIN	1100011X	0x63	0xC6	400 kHz
	STROBE 2	0000110X	0x06	0x0C	1 MHz
ISP I2C2 400kHz	CONCORD	0010000X	0x10	0x20	1 MHz
AOP I2C 1MHz	ARC DRIVER 1	100000YX	0x41	0x82	1 MHz
	PROX	1011000X	0x58	0xB0	1 MHz
	SPKAMP1 (L26)	100000YX	0x40	0x80	1 MHz
	TURTLE	0101100X	0x2c	0x58	400 kHz
	MESA	1100001X	0x61	0xC2	400 kHz
Touch I2C 400kHz	MAMBA	1100000X	0x60	0xC0	1 MHz
	MESON	1000000X	0x40	0x80	510 kHz
EEPROM I2C	EEPROM	1010001X	0x51	0xA2	400 kHz
AP I2C0 400kHz	BOOST	1110101X	0x75	0xEA	3.4 MHz
	TRISTAR	0011010X	0x1A	0x34	400 kHz
	BACKLIGHT 1	1100010X	0x62	0xC4	1 MHz
	CHESTNUT	0100111X	0x27	0x4E	400 kHz
AP I2C1 400kHz	ADELYN	1110100X	0x74	0xE8	400 kHz
	TIGRIS	1110101X	0x75	0xEA	400 kHz
	BACKLIGHT 2	1100010X	0x62	0xC4	1 MHz
AP I2C2 400kHz	ALS	0101001X	0x29	0x52	400 kHz
	CONVOY	0100001X	0x21	0x42	3.4 MHz
		0100010X	0x22	0x44	400 kHz
	SPKAMP 2 (L26)	100005YX	0x40	0x80	400 MHz
AP I2C3 100kHz	DOCK FLEX (MIC1)	1010100X	0x54	0xA8	1 MHz
	COMBINED BUTTON FLEX (MIC2)	1010100X	0x56	0xAC	1 MHz
	DISP EEPROM	1010001X	0x51	0xA2	400kHz
Homer I2C 1MHz	SCHRODINGER (STANDARD)	0001110X	0xE	0x1C	1 MHz
	SCHRODINGER (CAL REG'S)	0001111X	0xF	0x1D	1 MHz
	EEPROM (STANDARD)	1010000X	0x50	0xA0	
	EEPROM (CONFIG)	1010000X	0x50	0xA0	

PAGE TITLE	spare
Apple Inc.	DRAWING NUMBER 051-00419 SIZE D
	REVISION 8.0.0
NOTICE OF PROPRIETARY PROPERTY: THE INFORMATION CONTAINED HEREIN IS THE PROPRIETARY PROPERTY OF APPLE INC. THE POSESSOR AGREES TO THE FOLLOWING: I TO MAINTAIN THIS DOCUMENT IN CONFIDENCE II NOT TO REPRODUCE OR COPY IT III NOT TO REVEAL OR PUBLISH IT IN WHOLE OR PART IV ALL RIGHTS RESERVED	BRANCH
	PAGE 6 OF 53
	SHEET 6 OF 81

PAGE TITLE	spare
Apple Inc.	DRAWING NUMBER 051-00419 SIZE D
	REVISION 8.0.0
NOTICE OF PROPRIETARY PROPERTY: THE INFORMATION CONTAINED HEREIN IS THE PROPRIETARY PROPERTY OF APPLE INC. THE POSESSOR AGREES TO THE FOLLOWING: I TO MAINTAIN THIS DOCUMENT IN CONFIDENCE II NOT TO REPRODUCE OR COPY IT III NOT TO REVEAL OR PUBLISH IT IN WHOLE OR PART IV ALL RIGHTS RESERVED	BRANCH
	PAGE 6 OF 53
	SHEET 6 OF 81

This page contains items which differ accross all MLB designs

PCIe lanes

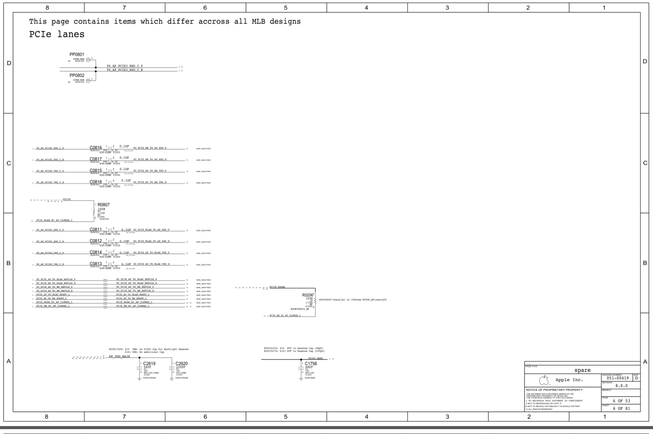

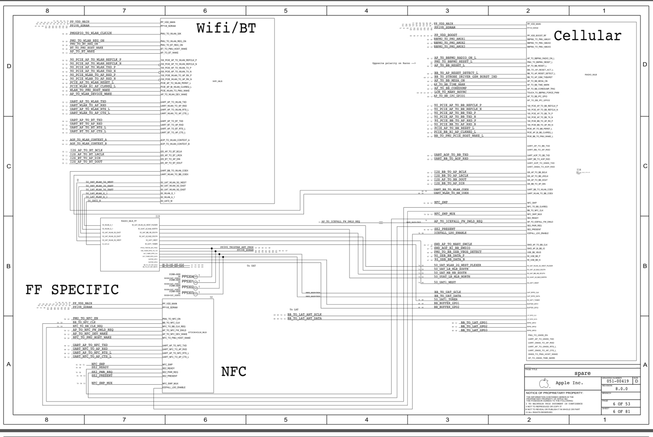

REV	ECN	DESCRIPTION OF REVISION	DATE
0	0594A0017	ENGINEERING RELEASED	2010.08.19

D1X WIFI_MLB (PERENNIAL)
FEBRUARY 1, 2016

PDF PAGE	CSA PAGE	CONTENTS
2	76	PERENNIAL
3	77	WIFI FRONT-END

BOM OPTIONS:

D10_2P4

PART	DESCRIPTION	REFERENCE DESIGNATIONS	CRITICAL	DESCRIPTION
1.C0G0402	100.0PF,10V,+/-1.0%,C0G0402	C7100_BP	0402PCNL	C10_BP
2.C0G0402	1.0PF,10V,+/-0.25PF,C0G0402	C7101_BP	0402PCNL	C11_BP
1.C7B0402	2.2PF,50V,+/-0.25PF,C7B0402	C7102_BP	0402PCNL	C12_BP
1.C7B0402	8PF,50V,+/-0.25PF,C7B0402	C7103_BP	0402PCNL	C13_BP
1.C7B0402	8PF,50V,+/-0.25PF,C7B0402	C7104_BP	0402PCNL	C14_BP
1.C0G0402	15PF,50V,+/-5%,C0G0402	C7105_BP	0402PCNL	C15_BP
1.C0G0402	15PF,50V,+/-5%,C0G0402	C7106_BP	0402PCNL	C16_BP
1.C0G0402	15PF,50V,+/-5%,C0G0402

STOCKHOLM

NFC CONTROLLER

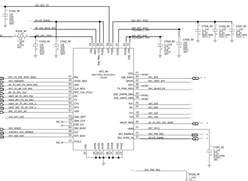

5V BOOSTER

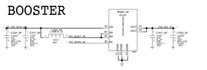

NFC FRONT END

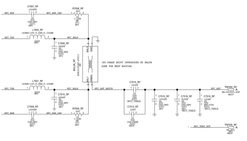

NFC LOAD SWITCH





REV	ECN	DESCRIPTION OF REVISION	DATE
X	0996889	ENGINEERING RELEASE	2016-06-28

Apple Inc. — spare — 051-05419 — 0.0.0

NOTICE OF PROPRIETARY PROPERTY:
THE INTERPRETATION, DISTRIBUTION, OR REPRODUCTION OF THIS DOCUMENT IN WHOLE OR IN PART, WITHOUT THE WRITTEN PERMISSION OF APPLE INC. IS PROHIBITED.

4 OF 51
4 OF 81

1. ALL RESISTANCE VALUES ARE IN OHMS, 1% UNLESS OTHERWISE NOTED
2. ALL CAPACITANCE VALUES ARE IN MICROFARADS.
3. ALL CRYSTAL & OSCILLATOR VALUES ARE IN MHZ

D10 RADIO_MLB_FF
FEB 19, 2016

D10 NORTH-SOUTH METROCIRC
339S00086

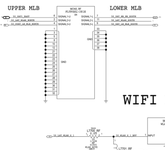

D10 EAST-WEST METROCIRC
339S00110



WIFI LOWER ANTENNA FEED

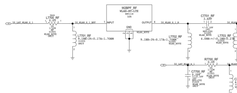

COAX



THROUGH METROCIRC

ADD REV ID FOR D10/D11 HERE

REV	ECN	DESCRIPTION OF REVISION	DATE
X	0996889	ENGINEERING RELEASE	2016-06-28

Apple Inc. — spare — 051-05419 — 0.0.0

NOTICE OF PROPRIETARY PROPERTY:
THE INTERPRETATION, DISTRIBUTION, OR REPRODUCTION OF THIS DOCUMENT IN WHOLE OR IN PART, WITHOUT THE WRITTEN PERMISSION OF APPLE INC. IS PROHIBITED.

4 OF 51
4 OF 81

UAT TUNER FLEX

PLEASE CONTACT ANTENNA (X477 NOW) FOR ANY COMPONENT CHANGE.

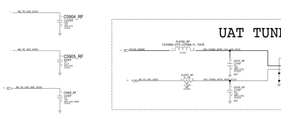

LB/MLB/GNSS/MB/HB STANDOFF

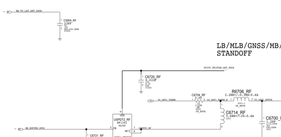

ALT UAT1 GND



UAT GROUND RING



5G WIFI STANDOFF

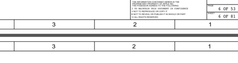

REV	ECN	DESCRIPTION OF REVISION	DATE
X	0996889	ENGINEERING RELEASE	2016-06-28

Apple Inc. — spare — 051-05419 — 0.0.0

NOTICE OF PROPRIETARY PROPERTY:
THE INTERPRETATION, DISTRIBUTION, OR REPRODUCTION OF THIS DOCUMENT IN WHOLE OR IN PART, WITHOUT THE WRITTEN PERMISSION OF APPLE INC. IS PROHIBITED.

4 OF 51
4 OF 81

BOM LIST

PART	QTY	DESCRIPTION	REFERENCE DESIGNATORS	OPTION	DESCRIPTION
339S00086	1	CONN ANT SWITCH	CONN_ANT	OPTION	CONN
339S00110	1	CONN	CONN_ANT	OPTION	CONN

REV	ECN	DESCRIPTION OF REVISION	DATE
X	0996889	ENGINEERING RELEASE	2016-06-28

Apple Inc. — spare — 051-05419 — 0.0.0

NOTICE OF PROPRIETARY PROPERTY:
THE INTERPRETATION, DISTRIBUTION, OR REPRODUCTION OF THIS DOCUMENT IN WHOLE OR IN PART, WITHOUT THE WRITTEN PERMISSION OF APPLE INC. IS PROHIBITED.

4 OF 51
4 OF 81

1. ALL RESISTANCE VALUES ARE IN OHMS, 1% UNLESS OTHERWISE NOTED
2. ALL CAPACITANCE VALUES ARE IN MICROFARADS.
3. ALL CRYSTAL & OSCILLATOR VALUES ARE IN MHZ
4. [1] [2]SYSCFG: DTR, DEVICE_CONN

MAV16 RADIO_MLB

LAST_MODIFICATION=Wed Jun 8 12:54:09 2016

REV	ECN	DESCRIPTION OF REVISION	DATE
X	0996889	ENGINEERING RELEASE	2016-06-28

PAGE CSA CONTENTS

PAGE	CSA	CONTENTS	SYNC	DATE
1	"MB_BOM"	BOM_BOM_TABLE	=SYNC_MASTER(/)	"MB_BOM"
61	"MB_BOM"	PMU: CONTROL AND CLOCKS	=SYNC_MASTER(/)	"MB_BOM"
62	"MB_BOM"	PMU: SHUTDOWNS AND LOGIC	=SYNC_MASTER(/)	"MB_BOM"
63	"MB_BOM"	BASEBAND: POWER2	=SYNC_MASTER(/)	"MB_BOM"
67	"MB_BOM"	BASEBAND: CONTROL	=SYNC_MASTER(/)	"MB_BOM"
68	"MB_BOM"	BASEBAND: DIGITAL	=SYNC_MASTER(/)	"MB_BOM"
69	"MB_BOM"	TRANSCEIVER(1): POWER	=SYNC_MASTER(/)	"MB_BOM"
70	"MB_BOM"	TRANSCEIVER(1): TX PORTS	=SYNC_MASTER(/)	"MB_BOM"
71	"MB_BOM"	TRANSCEIVER(1): PRX PORTS	=SYNC_MASTER(/)	"MB_BOM"
72	"MB_BOM"	RECEIVE MATCHING	=SYNC_MASTER(/)	"MB_BOM"
73	"MB_BOM"	LOWER ANTENNA & COUPLERS	=SYNC_MASTER(/)	"MB_BOM"
74	"MB_BOM"	UPPER ANTENNA & COUPLERS	=SYNC_MASTER(/)	"MB_BOM"
75	"MB_BOM"	DIVERSITY RECEIVE LNA 8	=SYNC_MASTER(/)	"MB_BOM"
76	"MB_BOM"	UPPER ANTENNA FEEDS	=SYNC_MASTER(/)	"MB_BOM"
77	"MB_BOM"	PMU: RF REGULATOR	=SYNC_MASTER(/)	"MB_BOM"
78	"MB_BOM"	PMUF PRIMPS & BOOT CONFIG	=SYNC_MASTER(/)	"MB_BOM"
79	"MB_BOM"	PMU: GPIOS	=SYNC_MASTER(/)	"MB_BOM"
80	"MB_BOM"	PCH TRANSMIT	=SYNC_MASTER(/)	"MB_BOM"
	"MB_BOM"

PMU: CONTROL AND CLOCKS

HW_REV_ID	R5505	R5501	REVISION
0.10V	887K	51.1K	DEV1
0.20V	422K	51.1K	DEV2
0.30V	255K	51.1K	DEV 2.1
0.40V	180K	51.1K	DEV 3
0.50V	124K	51.1K	T181
0.60V	102K	51.1K	PP/P1
0.70V	82.5K	51.1K	DEV4
0.80V	63.4K	51.1K	P2
0.90V	51.1K	51.1K	DEV5
1.00V	51.1K	63.4K	EVT
1.10V	51.1K	82.5K	EVT DOE
1.20V	50.0K	100K	EVT ALT/CARBON
1.30V	39.0K	100K	DEV6
1.40V	14.7K	51.1K	CARRIER
1.50V	40.2K	200K	DVT
1.60V	6.34K	51.1K	PVT

RESET AND CONTROL: PMU

MPPS AND GPIOS: PMU

XTAL AND CLOCK: PMU

spare — Apple Inc. — 051-00419 — D — 8.0.0 — 6 OF 53 — 6 OF 81

NOTICE OF PROPRIETARY PROPERTY:
THE INFORMATION CONTAINED HEREIN IS THE PROPRIETARY PROPERTY OF APPLE INC.
THE POSSESSOR AGREES TO THE FOLLOWING:
I TO MAINTAIN THIS DOCUMENT IN CONFIDENCE
II NOT TO REPRODUCE OR COPY IT
III NOT TO REVEAL OR PUBLISH IT IN WHOLE OR PART
IV ALL RIGHTS RESERVED

PMU: SWITCHERS AND LDOS

spare — Apple Inc. — 051-00419 — D — 8.0.0 — 6 OF 53 — 6 OF 81

CONFIDENTIAL AND PROPRIETARY APPLE SYSTEM DESIGN. FOR REFERENCE PURPOSE ONLY - NOT A CHANGE REQUEST

BASEBAND: POWER

spare — Apple Inc. — 051-00419 — D — 8.0.0 — 6 OF 53 — 6 OF 81

CONFIDENTIAL AND PROPRIETARY APPLE SYSTEM DESIGN. FOR REFERENCE PURPOSE ONLY - NOT A CHANGE REQUEST

BASEBAND: CONTROL AND INTERFACES

spare — Apple Inc. — 051-00419 — D — 8.0.0 — 6 OF 53 — 6 OF 81

CONFIDENTIAL AND PROPRIETARY APPLE SYSTEM DESIGN. FOR REFERENCE PURPOSE ONLY - NOT A CHANGE REQUEST

BASEBAND: GPIOS

SKU	R5911_RF	R5912_RF
ROW	NOSTUFF	NOSTUFF
JP	1.0 KOHM	NOSTUFF

RFFE USAGE TABLE

RFFE1 WTR3925
RFFE2 QFE3100
RFFE3 DIV MODULES
RFFE4 WTR4905
RFFE5 TUNERS + ELNAS
RFFE6 2G PA,MLB PA,MB/HB TDD PA,MB/HB FDD PA
RFFE7 LB PA, COUPLERS

spare — Apple Inc. — 051-00419 — D — 8.0.0 — 6 OF 53 — 6 OF 81

CONFIDENTIAL AND PROPRIETARY APPLE SYSTEM DESIGN. FOR REFERENCE PURPOSE ONLY - NOT A CHANGE REQUEST

TRANSCEIVER: POWER

spare — Apple Inc. — 051-00419 — D — 8.0.0 — 6 OF 53 — 6 OF 81

CONFIDENTIAL AND PROPRIETARY APPLE SYSTEM DESIGN. FOR REFERENCE PURPOSE ONLY - NOT A CHANGE REQUEST

TRANSCEIVER: TX PORTS

spare — Apple Inc. — 051-00419 — D — 8.0.0 — 6 OF 53 — 6 OF 81

CONFIDENTIAL AND PROPRIETARY APPLE SYSTEM DESIGN. FOR REFERENCE PURPOSE ONLY - NOT A CHANGE REQUEST

TRANSCEIVER: PRX, DRX, & GPS PORTS

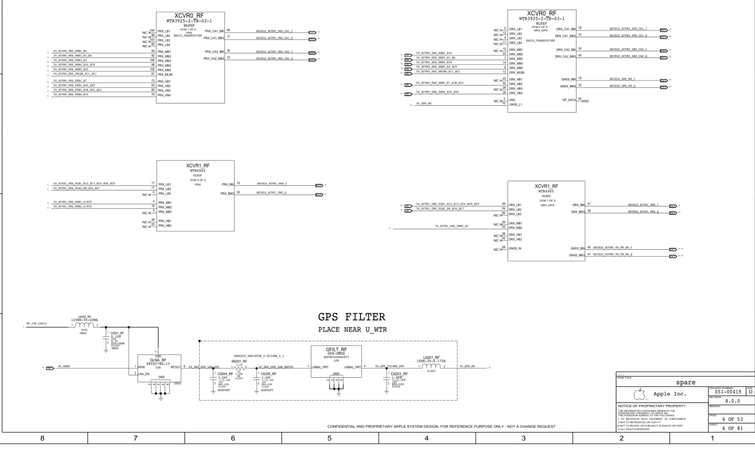

SIZE TITLE	spare
	Apple Inc.
	051-00419 G
	8.0.0
NOTICE OF PROPRIETARY PROPERTY: THE INFORMATION CONTAINED HEREIN IS THE PROPERTY OF APPLE INC. EXCEPT AS SPECIFICALLY AUTHORIZED IN WRITING BY APPLE INC. THE RECIPIENT HEREOF SHALL NOT DISCLOSE THE INFORMATION CONTAINED HERE TO ANY THIRD PARTY AND SHALL NOT USE THE INFORMATION FOR ANY PURPOSE OTHER THAN THE PURPOSE FOR WHICH IT IS LOANED. ALL RIGHTS RESERVED.	SHEET 4 OF 53
	4 OF 81

PRIMARY & DIVERSITY RECEIVE MATCHING

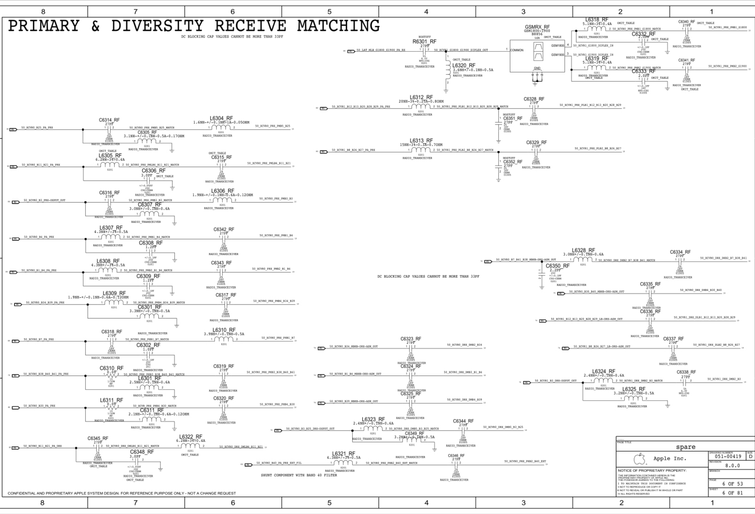

SIZE TITLE	spare
	Apple Inc.
	051-00419 G
	8.0.0
NOTICE OF PROPRIETARY PROPERTY: THE INFORMATION CONTAINED HEREIN IS THE PROPERTY OF APPLE INC. EXCEPT AS SPECIFICALLY AUTHORIZED IN WRITING BY APPLE INC. THE RECIPIENT HEREOF SHALL NOT DISCLOSE THE INFORMATION CONTAINED HERE TO ANY THIRD PARTY AND SHALL NOT USE THE INFORMATION FOR ANY PURPOSE OTHER THAN THE PURPOSE FOR WHICH IT IS LOANED. ALL RIGHTS RESERVED.	SHEET 5 OF 53
	5 OF 81

LOWER ANTENNA AND COUPLER

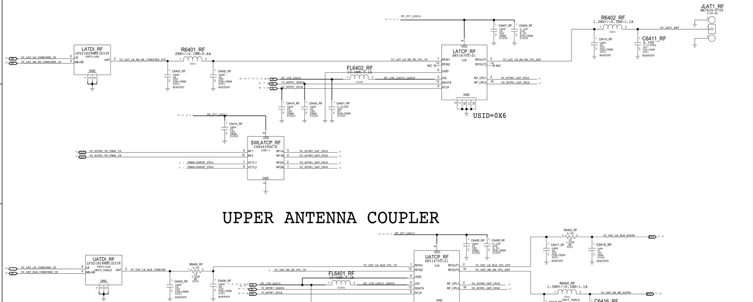

UPPER ANTENNA COUPLER

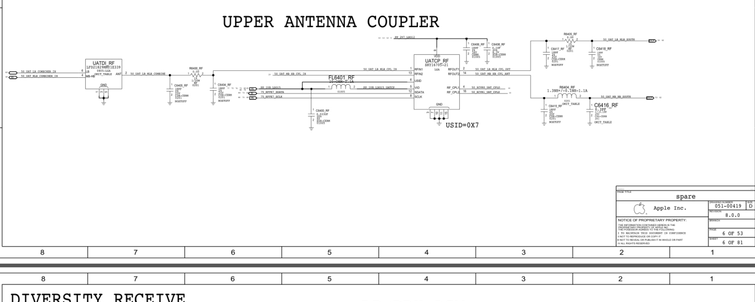

SIZE TITLE	spare
	Apple Inc.
	051-00419 G
	8.0.0
NOTICE OF PROPRIETARY PROPERTY: THE INFORMATION CONTAINED HEREIN IS THE PROPERTY OF APPLE INC. EXCEPT AS SPECIFICALLY AUTHORIZED IN WRITING BY APPLE INC. THE RECIPIENT HEREOF SHALL NOT DISCLOSE THE INFORMATION CONTAINED HERE TO ANY THIRD PARTY AND SHALL NOT USE THE INFORMATION FOR ANY PURPOSE OTHER THAN THE PURPOSE FOR WHICH IT IS LOANED. ALL RIGHTS RESERVED.	SHEET 6 OF 53
	6 OF 81

DIVERSITY RECEIVE

LB DRX ASM

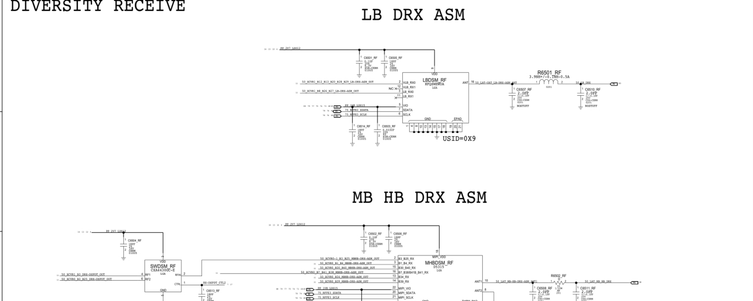

MB HB DRX ASM

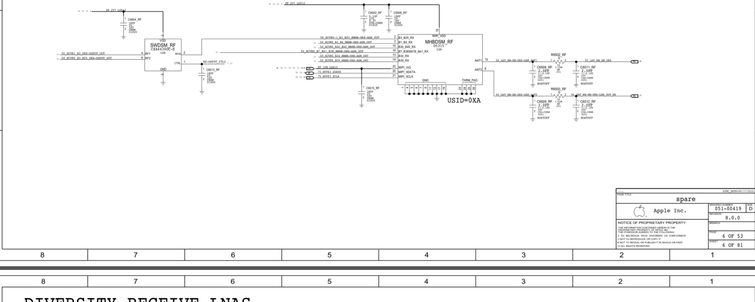

SIZE TITLE	spare
	Apple Inc.
	051-00419 G
	8.0.0
NOTICE OF PROPRIETARY PROPERTY: THE INFORMATION CONTAINED HEREIN IS THE PROPERTY OF APPLE INC. EXCEPT AS SPECIFICALLY AUTHORIZED IN WRITING BY APPLE INC. THE RECIPIENT HEREOF SHALL NOT DISCLOSE THE INFORMATION CONTAINED HERE TO ANY THIRD PARTY AND SHALL NOT USE THE INFORMATION FOR ANY PURPOSE OTHER THAN THE PURPOSE FOR WHICH IT IS LOANED. ALL RIGHTS RESERVED.	SHEET 7 OF 53
	7 OF 81

DIVERSITY RECEIVE LNAS

LB DRX LNA

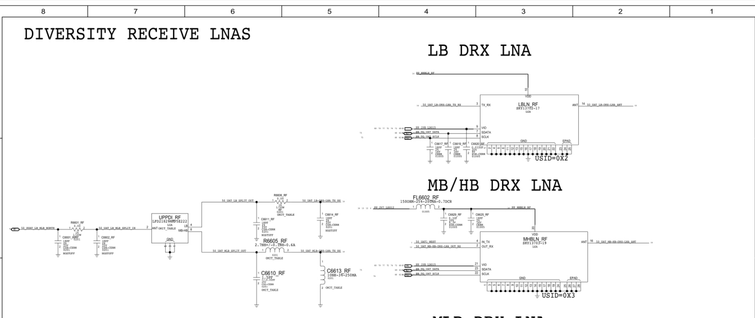

MB/HB DRX LNA

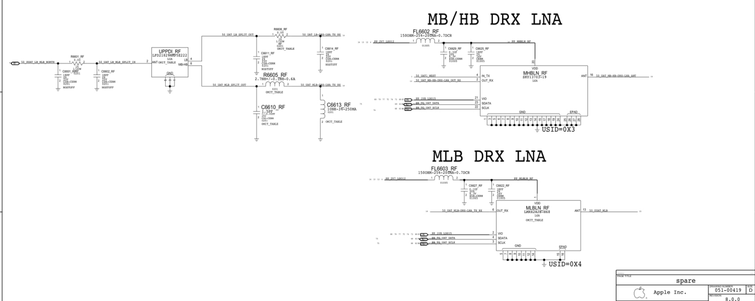

MLB DRX LNA

SIZE TITLE	spare
	Apple Inc.
	051-00419 G
	8.0.0
NOTICE OF PROPRIETARY PROPERTY: THE INFORMATION CONTAINED HEREIN IS THE PROPERTY OF APPLE INC. EXCEPT AS SPECIFICALLY AUTHORIZED IN WRITING BY APPLE INC. THE RECIPIENT HEREOF SHALL NOT DISCLOSE THE INFORMATION CONTAINED HERE TO ANY THIRD PARTY AND SHALL NOT USE THE INFORMATION FOR ANY PURPOSE OTHER THAN THE PURPOSE FOR WHICH IT IS LOANED. ALL RIGHTS RESERVED.	SHEET 8 OF 53
	8 OF 81

UPPER ANTENNA FEEDS

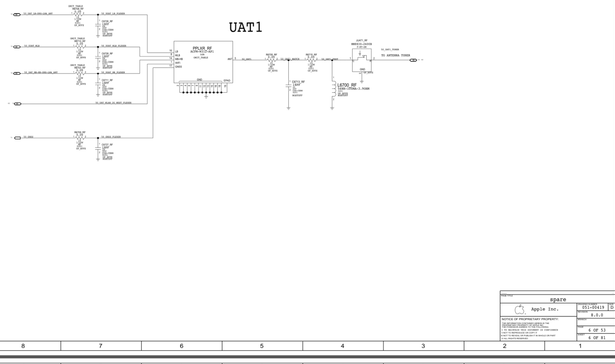

spare
Apple Inc.
051-00419 C
8.0.0
NOTICE OF PROPRIETARY PROPERTY:
THE INFORMATION CONTAINED HEREIN IS THE PROPERTY OF APPLE INC.
EXCEPT AS SPECIFICALLY AUTHORIZED IN WRITING BY APPLE INC., THE RECIPIENT SHALL KEEP THE INFORMATION CONFIDENTIAL AND SHALL NOT DISCLOSE THE INFORMATION TO ANY OTHER PERSON OR ENTITY.
IT IS RECEIVED ONLY ON THE UNDERSTANDING THAT NO RIGHTS OR LICENSES EXPRESS OR IMPLIED ARE GRANTED.
4 OF 53
4 OF 81

PMU: ET MODULATOR

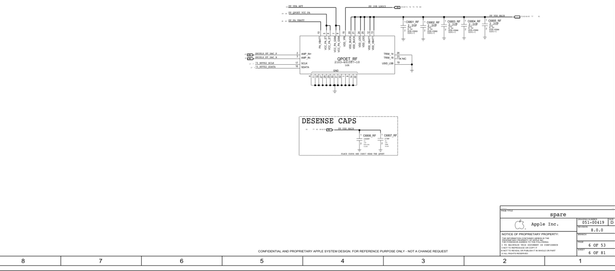

spare
Apple Inc.
051-00419 C
8.0.0
NOTICE OF PROPRIETARY PROPERTY:
THE INFORMATION CONTAINED HEREIN IS THE PROPERTY OF APPLE INC.
EXCEPT AS SPECIFICALLY AUTHORIZED IN WRITING BY APPLE INC., THE RECIPIENT SHALL KEEP THE INFORMATION CONFIDENTIAL AND SHALL NOT DISCLOSE THE INFORMATION TO ANY OTHER PERSON OR ENTITY.
IT IS RECEIVED ONLY ON THE UNDERSTANDING THAT NO RIGHTS OR LICENSES EXPRESS OR IMPLIED ARE GRANTED.
4 OF 53
4 OF 81

CONFIDENTIAL AND PROPRIETARY APPLE SYSTEM DESIGN. FOR REFERENCE PURPOSE ONLY - NOT A CHARGE REQUEST

MLB TEST POINTS



spare
Apple Inc.
051-00419 C
8.0.0
NOTICE OF PROPRIETARY PROPERTY:
THE INFORMATION CONTAINED HEREIN IS THE PROPERTY OF APPLE INC.
EXCEPT AS SPECIFICALLY AUTHORIZED IN WRITING BY APPLE INC., THE RECIPIENT SHALL KEEP THE INFORMATION CONFIDENTIAL AND SHALL NOT DISCLOSE THE INFORMATION TO ANY OTHER PERSON OR ENTITY.
IT IS RECEIVED ONLY ON THE UNDERSTANDING THAT NO RIGHTS OR LICENSES EXPRESS OR IMPLIED ARE GRANTED.
4 OF 53
4 OF 81

TDD TRANSMIT

2G PA

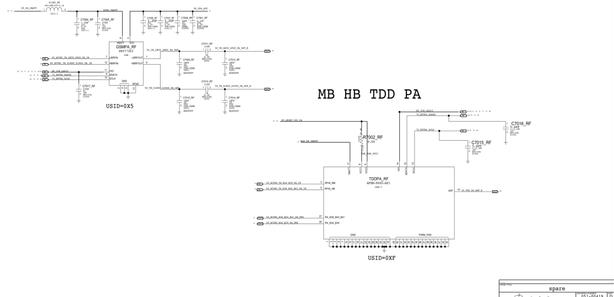

spare
Apple Inc.
051-00419 C
8.0.0
NOTICE OF PROPRIETARY PROPERTY:
THE INFORMATION CONTAINED HEREIN IS THE PROPERTY OF APPLE INC.
EXCEPT AS SPECIFICALLY AUTHORIZED IN WRITING BY APPLE INC., THE RECIPIENT SHALL KEEP THE INFORMATION CONFIDENTIAL AND SHALL NOT DISCLOSE THE INFORMATION TO ANY OTHER PERSON OR ENTITY.
IT IS RECEIVED ONLY ON THE UNDERSTANDING THAT NO RIGHTS OR LICENSES EXPRESS OR IMPLIED ARE GRANTED.
4 OF 53
4 OF 81

FDD TRANSMIT

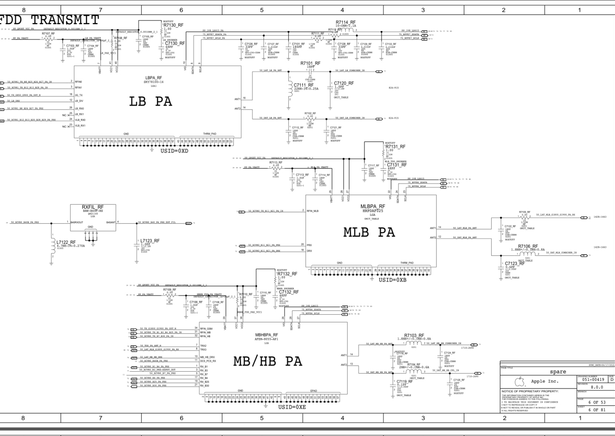

spare
Apple Inc.
051-00419 C
8.0.0
NOTICE OF PROPRIETARY PROPERTY:
THE INFORMATION CONTAINED HEREIN IS THE PROPERTY OF APPLE INC.
EXCEPT AS SPECIFICALLY AUTHORIZED IN WRITING BY APPLE INC., THE RECIPIENT SHALL KEEP THE INFORMATION CONFIDENTIAL AND SHALL NOT DISCLOSE THE INFORMATION TO ANY OTHER PERSON OR ENTITY.
IT IS RECEIVED ONLY ON THE UNDERSTANDING THAT NO RIGHTS OR LICENSES EXPRESS OR IMPLIED ARE GRANTED.
4 OF 53
4 OF 81

ICEFALL

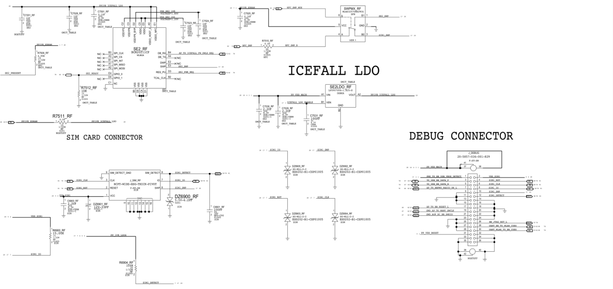

spare
Apple Inc.
051-00419 C
8.0.0
NOTICE OF PROPRIETARY PROPERTY:
THE INFORMATION CONTAINED HEREIN IS THE PROPERTY OF APPLE INC.
EXCEPT AS SPECIFICALLY AUTHORIZED IN WRITING BY APPLE INC., THE RECIPIENT SHALL KEEP THE INFORMATION CONFIDENTIAL AND SHALL NOT DISCLOSE THE INFORMATION TO ANY OTHER PERSON OR ENTITY.
IT IS RECEIVED ONLY ON THE UNDERSTANDING THAT NO RIGHTS OR LICENSES EXPRESS OR IMPLIED ARE GRANTED.
4 OF 53
4 OF 81